EXHIBITS

PASS
— by PaySchools

EXHIBIT VII.A

PASS: Pay at School System

Accept payments online, over the phone, or in-person.

PASS enables face-to-face transactions for any student from any school within your district. It helps schools collects cash, check and credit card payments in-person including non-student associated transactions like clubs and donations.

> "PaySchools helped us implement an online payment system for our summer school classes by creating a summer school 'school', allowing parents to go in and select and pay for summer classes." – Cyndi, Controller

PASS enables you to:

- ☑ Conduct transactions in person
- ☑ Look up student information, read notes and view required fees
- ☑ Interact seamlessly with PaySchools Central so fees are reflected automatically online
- ☑ Accept payments anytime, anywhere

Key Capabilities:

Easy-to-use

The need to make a fee or lunch payment can arrive without notice. Or a parent may not be able to access the payment engine online. With the Pay-At-School System, or PASS you can help your parent take care of fee and lunch payments in person, quickly and easy.

Flexible

Detailed pass reports are readily available whenever you or your staff need them, and they are accessible from the same website to run PASS and other PaySchools modules

Advantages for your District:

Powerful

The need to make a fee or lunch payment can arrive without notice. Or a parent may not be able to access PaySchools Central online. With the Pay-at-School System, or PASS, you can help your parents take care of fee and lunch payment in person, quickly and easily. With PASS, you can look up student information, read necessary notes, view required fees, and process payments .. all while speaking with a parent face-to-face. And because PASS interacts seamlessly with PaySchools Central, any fees paid in-person are also automatically reflected online. This gives our districts the ability to accept any payment, anytime, anywhere

Fast

Pass records and functions are operated and reported centrally to minimize the amount of maintenance needed by your district staff. It interfaces with student-information systems, to keep records up-to date on a consistent basis. PASS also provides a versatile interface that allows for multiple ways of listing different fee items.

Call us at (855) 210-8232 opt.4 or sales@payschools.com

PaySchools

Company Address	4100 Holiday Street NW Suit 101 Canton, OH 44718 US	Created Date	9/15/2020
		Expiration Date	10/14/2020
		Quote Number	00004254
Prepared By	Gino Caponi	Contact Name	Mary Ann Nowak
Email	gino.caponi@payschools.com	Phone	440 - 233 - 3801
Bill To Name	Clearview Local	Ship To Name	Clearview Local
Bill To	4700 Broadway, Lorain, OH 44052 (440)233-5412 Lorain County 1,654 3 Lorain, Ohio 44052 USA		

Software Implementation

Product	Description of Products	Sales Price	Quantity	Discount	Total Price	Line Item Description
PaySchools Admin Annual Agreement	Central browser-based system responsible for management of student data across the multitude of systems (and data formats) used throughout school systems. This product is used to integrate all of our products along with any other district software. Does not include individual PaySchools modules.	$495.00	1.00		$495.00	Annual Maintenance
PaySchools Admin Per School	Annual licensing agreement for PaySchools Admin per school in the district	$55.00	3.00		$165.00	Annual Maintenance Per Building
PaySchools Central	Annual agreement for software, support, and maintenance of both online and mobile products. PaySchools Central is a state of the art, secure online payment system which simplifies payments for parents and schools.	$0.00	1.00		$0.00	
Hosting-Minimum Fee Per Site	Minimum annual fee for hosting per schools site.	$360.00	3.00	67.00%	$356.40	Hosting per building charge
Remote Installation, Setup & Training	Product training for Administrators and others. How to manage items. Look up history. Capture information and run reports. Training is customized to the audience and product mix. Configuration of integration with Student Information Systems and other systems in the district like G/L and library systems.	$600.00	1.00		$600.00	1 Time Installation charge
PASS Annual Agreement - per license	Per site annual agreement to include licensing, support, & maintenance for PASS within PaySchools Admin	$195.00	1.00		$195.00	Annual Maintenance
PASS Professional Installation and Training		$450.00	1.00		$450.00	1 time Training & Install Charge
USAS District Integration Annual Agreement		$225.00	1.00		$225.00	
USAS						

PaySchools

Professional Integration Installation and Training		$700.00	1.00		$700.00	1 Time Installation & Training
USAS School Integration Annual Agreement	Per school charge	$65.00	3.00		$195.00	
PaySchools Events Annual Agreement	Online event registration and ticketing software with customizable events pages, registration fields, unique qr coded tickets, google maps integration, and event accounting and reconciliation. Comes with event concierge. Priced per site/school and with .75 cent per ticket charge.	$295.00	3.00		$885.00	Annual Maintenance License
PaySchools Events QuikSale	Additional PaySchools Events Point of Sale software for face to face sales including credit cards. This is an annual agreement and a per seat or per user charge.	$295.00	1.00		$295.00	POS for Face to Face Transactions
PaySchools Events Remote Installation and Set-up	Product set-up, event creation and customization, and merchant enrollment.	$495.00	1.00		$495.00	1 time charge Set Up

Subtotal	$5,780.00
Total Price	$5,056.40
Grand Total	$5,056.40

Electronic Check (ACH) per transaction -- Funds are Guaranteed

ACH Transactions $1.75

Credit/Debit Card Internet Convenience Fee (ICF) Straight Percentage

ICF Percentage 3.90%

Credit/Debit Card Lunch Internet Convenience Fee (ICF) Transactions Under $50

Lunch ICF $1.65

Notes

- By accepting this quote, you acknowledge and agree that PaySchools requires data from a variety of third-party software programs to operate. The lack of that data for any reason will affect the operation of PaySchools' software in a material way.
- Transaction costs can be allocated to the District, the Parent/Guardian User, or a combination of both (adding up to 100%).
- In the event of a NSF ACH charge the Parent/Guardian will be charged $30. In the event of invalid information entered by the user, a $5 fee will be charged to the account.
- Credit card funds are verified immediately while the Parent/Guardian is online.
- All credit card transactions in PASS will be charged the quoted ICF % listed above and cannot be passed along to the end user. The district will be charged monthly for all PASS credit card only transactions.
- For Use of PaySchools Events
    - 75 cents per ticket
    - 2.5% fee on cash/check/PO purchases in QuikSale

Payment Schedule

PaySchools

1. 2/10 net 30

2. Annual agreement costs are due July 1 for the following year.

Please let me know if you have any questions. Thank you for your Business!

Name: _____

Signature: _____

Date: _____

Purchase Order # (REQUIRED): _____

Go Live Date: _____

AIA® Document G701™ – 2017

Change Order

PROJECT: *(Name and address)*	CONTRACT INFORMATION:	CHANGE ORDER INFORMATION:
Clearview Bus Garage	Contract For: General Construction Date: February 12, 2020	Change Order Number: 014 Date: September 17, 2020
OWNER: *(Name and address)* Clearview Local School District 4700 Broadway Avenue Lorain, Ohio 44052	**ARCHITECT:** *(Name and address)* GPD Group 520 South Main Street Suite 2531 Akron, Ohio 44311	**CONTRACTOR:** *(Name and address)* Seitz Builders, Inc. 8055 Broadway Road Broadway Heights, Ohio 44147

THE CONTRACT IS CHANGED AS FOLLOWS:
(Insert a detailed description of the change and, if applicable, attach or reference specific exhibits. Also include agreed upon adjustments attributable to executed Construction Change Directives.)

PCOS #19: Wireless Communicator and Fire Evacuation Holders: ADD $2,226.52

The original Contract Sum was	$	1,687,000.00
The net change by previously authorized Change Orders	$	78,811.91
The Contract Sum prior to this Change Order was	$	1,765,811.91
The Contract Sum will be increased by this Change Order in the amount of	$	2,226.52
The new Contract Sum including this Change Order will be	$	1,768,038.43

The Contract Time will be unchanged by Zero (0) days.
The new date of Substantial Completion will be unchanged

NOTE: This Change Order does not include adjustments to the Contract Sum or Guaranteed Maximum Price, or the Contract Time, that have been authorized by Construction Change Directive until the cost and time have been agreed upon by both the Owner and Contractor, in which case a Change Order is executed to supersede the Construction Change Directive.

NOT VALID UNTIL SIGNED BY THE ARCHITECT, CONTRACTOR AND OWNER.

GPD Group **ARCHITECT** *(Firm name)*	Seitz Builders, Inc. **CONTRACTOR** *(Firm name)*	Clearview Local School District **OWNER** *(Firm name)*
SIGNATURE	Robert B. Seitz **SIGNATURE**	Mary Ann Nowak **SIGNATURE**
Russell Gayheart, Project Architect **PRINTED NAME AND TITLE**	Bob Seitz **PRINTED NAME AND TITLE**	Mary Ann Nowak, Treasurer **PRINTED NAME AND TITLE**
September 17, 2020 **DATE**	**DATE**	9/21/2020 **DATE**

SEITZ BUILDERS, INC.

PRE-CHANGE ORDER SUMMARY AND ADDITIONAL WORK AUTHORIZATION OR FIELD CHANGE DIRECTIVE

P.C.O.S. #19 **FA COMMUNICATOR AND EVAC HOLDERS**

SUBMITTED TO: RUSSELL GAYHEART
GPD GROUP

DATE: 9-11-2020

OWNER'S NAME: CLEARVIEW LOCAL SCHOOLS

JOB NAME: CLEARVIEW BUS GARAGE

EXISTING CONTRACT OR PROJECT NO. & DATE: 2018200.13 – FEBRUAURY 20,2020

SUMMARY OF CHANGES: PER YOUR REQUEST WE HAVE PRICED THE FOLLOWING:

SEE ATTACHED PRICING QUOTE.

8055 BROADVIEW ROAD * BROADVIEW HEIGHTS, OHIO 44147 * 440-838-1011 / FAX 440-838-1806

SEITZ BUILDERS, INC.

SEE ATTACHED QUOTES	$ 1,886.88
	$ -
	$ -
	$ -
SEITZ BUILDERS , INC. HR.@ $75.00/HR COST OF SUPERVISION AND FIELD OFFICE PERSONNEL DIRECTLY ATTRIBUTED TO THIS CHANGE	$ -
SUBTOTAL	$ 1,886.88
OVERHEAD	$ 283.03
BOND AND INSURANCE	$ 56.61
TOTAL	$ 2,226.52

WE WILL REQUIRE A WRITTEN CHANGE ORDER ACCORDING TO THE CONTRACT DOCUMENTS. WE WILL NEED T.B.D. ADDITIONAL DAYS TO COMPLETE THIS WORK, PROVIDING A SIGNED CHANGE ORDER IN ACCORDANCE TO THE CONTRACT DOCUMENTS IS RECEIVED BEFORE 9-15-2020, IF NOT RECEIVED BEFORE THIS DATE THE ABOVE PRICING IS NULL AND VOID.

SIGNATURE: _____ DATE_____
OWNER

SIGNATURE: _____ DATE_____
SEITZ BUILDERS, INC.

NO WORK WILL COMMENCE UNTIL SIGNED ACCEPTANCE IS RECEIVED PER THE CONTRACT.

8055 BROADVIEW ROAD • BROADVIEW HEIGHTS, OHIO 44147 • 440-838-1011 / FAX 440-838-1806

SEITZ BUILDERS, INC.

CHANGE ORDER ARTICLES

(To be included with each Change Order agreement)

ARTICLE I

THIS CHANGE ORDER MAY CAUSE UNFORESEEN AND UNCONTEMPLATED DELAYS TO, HINDRANCES TO, INTERFERENCE'S WITH AND/OR DISRUPTIONS TO ORIGINAL CONTRACT WORK AND/OR TO OTHER CHANGE ORDER WORK. THE COSTS OF THOSE DELAYS, HINDRANCES, BOTH IN TIME AND MONEY ARE NOT PART OF THIS CHANGE ORDER AND THE RIGHT TO SUCH ADDITIONAL COSTS AND TIME IS SPECIFICALLY RESERVED AND NOT ACCORDED OR SATISFIED BY THIS CHANGE ORDER.

ARTICLE II

CHANGES TO AND EFFECTS UPON CONSTRUCTION SCHEDULES, AND ORIGINAL PERFORMANCE TIME, ORIGINAL COSTS, METHODS, MEANS, SEQUENCES AND PROCEDURES OF CONSTRUCTION OF ALL OTHER CONTRACT CHANGE ORDERS ARE NOT PART OF THIS CHANGE ORDER. ALL RIGHTS ARE RESERVED AND NOT ACCORDED OR SATISFIED REGARDING SUCH CHANGES AND EFFECTS.

ARTICLE III

THE AMOUNT (S) SET FORTH IN THIS CHANGE ORDER ARE FULL REIMBURSEMENT FOR THE DIRECT COST OF ALL LABOR, MATERIAL AND EQUIPMENT NECESSARY TO PERFORM THE WORK DESCRIBED IN THIS PRE-CHANGE ORDER SUMMARY ATTACHED. ALL RIGHTS ARE RESERVED AND ARE NOT ACCORDED OR SATISFIED BY THIS CHANGE ORDER REGARDING ADDITIONAL TIME REQUIRED OR ADDITIONAL COST INCURRED TO PERFORM ANY AND ALL OTHER WORK OF THIS CONTRACT (INCLUDING OTHER CHANGES ORDERS), CAUSED BY THIS CHANGE ORDER

8055 BROADVIEW ROAD • BROADVIEW HEIGHTS, OHIO 44147 • 440-838-1011 / FAX 440-838-1806

South Shore Electric, Inc.
589 Ternes Lane
Elyria, Ohio 44035

Phone 440-366-6289
Fax 440-366-6940
kbuckley@southshoreelectricinc.com

Date: September 8, 2020

To: Seitz Builders, Inc.
8055 Broadview Road
Broadview Hts., Ohio 44147

Attn.: Nicholas Hurst

Project: Clearview Bus Garage
From: South Shore Electric, Inc.
PCO: PR-??? FA Communicator
SSEI CR# 08

Scope: Provide Cellular/IP Communicator for fire alarm

Qty	Description	Mat Unit	Mat Ext		Labor unit	Labor Ext
1	Rebman Communicator	$968.00	$968.00		0.5	0.5
1	antenna installation (Furn by Rebman)	$0.00	$0.00		0.75	0.75
40	3/4" EMT conduit with fittings	$1.20	$48.00		0.05	2
100	RG-56 Coax (Furn by Rebman)	$0.00	$0.00		0.012	1.2
1	duplex receptacle	$4.00	$4.00		0.5	0.5
1	4" Sq Box w/cover & support	$5.00	$5.00		0.5	0.5
5	3/4" EMT conduit with fittings	$1.20	$6.00		0.05	0.25
15	#12 THHN Wire	$0.12	$1.80		0.005	0.075
1	cat6 patch cord	$12.00	$12.00		0.05	0.05
1	label, test, aim and energize	$5.00	$5.00		1	1
		Material	$1,049.80		Labor Hrs	6.825
		No Tax	$0.00		Labor$/hr	$73.54
		Mat Total	$1,049.80		Labor Total	$501.91
		M&L Subtotal		$1,551.71	M&L Subtotal	
		10% Markup		$155.17	10% Markup	
		Total		$1,706.88	Total	

This is our interpretation of the changes indicated in this Change Request. Please advise of any errors or ommissions.

Please issue a change order as authorization to proceed. Any questions, comments or concerns, please do not hesitate to contact me at my office at 440-366-6289, email at buckleyk@southshoreelectricinc.com or my cell at 216-389-5371

Respectfully submitted,

Keith A. Buckley
President

I:2019-jobs/Clearview Bus Garage - PR-00? FA Communicator 9-10-2020

REBMAN SYSTEMS, INC.

1909 North Ridge Rd. E., Unit 1
Lorain, OH 44055-3379

Phone (440) 277-4949
(800) 323-2008
Fax (440) 277-6755
Security@RebmanSystems.com
www.RebmanSystems.com

PROPOSAL/CONTRACT

Submitted to: South Shore Electric
Attn: Keith Buckley
589 Ternes Lane
Elyria, OH 44035

Phone: (216) 389-5371

Project: Internet/Cellular Communicator
Clearview Bus Garage
100 N. Ridge Rd. West
Lorain, OH 44052

Date: September 10, 2020

Scope of Work:
PARTS-N-SMARTS arrangement. Rebman Systems will supply an internet/cellular communicator, cellular antenna, coax cable, antenna mount kit, and connectors & adapters to South Shore Electric. South Shore will install communicator and cellular antenna with accessories. Rebman Systems will coordinate programming of fire alarm panel with South Shore's vendor. RSI's technician will terminate, program, and test communicator. Communicator will send alarm and trouble conditions to the EMERgency 24 central station and will alert authorities and one customer contact. Monitoring service fee will be invoiced to Clearview Schools. NOTE: Need a 120V outlet near fire alarm control panel and communicator (same circuit as FACP). See conditions for customer's responsibilities and items that are not included and may require an additional expense.

The following will be supplied, programmed and tested:
1 - Honeywell HWF2V-COM Series LTE / IP Fire Communicator, Verizon Network
1 - MK Battery ES7-12SA 12VDC 7 Amp Hour Standby Rechargeable Battery
1 - Minuteman MMS660S Low Profile 6-Outlet Surge Protector
1 - Wilson 304421 4G Omni Building Antenna 75 ohm
1 - Lot 100' RG-56 Coax Cable (Antenna)
1 - Lot Connectors & Adapter
1 - Lot Antenna Mount Kit

PARTS-N-SMARTS TOTAL **$968.00** tax exempt

Acceptance of Proposal – By signing below, Buyer hereby acknowledges that Buyer has reviewed, approved and hereby accepts the above Proposal and all of its terms and conditions, including the Terms and Conditions listed below. Rebman Systems, Inc. is authorized to do the work as specified. Payment will be made as outlined above. Authorization below converts this proposal to a legally binding contract.

Authorized By: _____ Name: Kenneth G. Rebman
RSI REPRESENTATIVE

Accepted By: _____ Name: _____

REBMAN SYSTEMS, INC.

1909 North Ridge Rd. E., Unit 1
Lorain, OH 44055-3379

Phone (440) 277-4949
(800) 323-2008
Fax (440) 277-6755
Security@RebmanSystems.com
www.RebmanSystems.com

PROPOSAL/CONTRACT

Submitted to: South Shore Electric
Attn: Keith Buckley
589 Ternes Lane
Elyria, OH 44035

Project: Internet/Cellular Communicator
Clearview Bus Garage
100 N. Ridge Rd. West
Lorain, OH 44052

Phone: (216) 389-5371

Date: September 10, 2020

Warranties:

1. Manufacturer's equipment warranties will be extended to customer.
2. Warranties begin on the date of RSI's final invoice.
3. All warranties are void if any part of system(s) is serviced by a company or individual other than Rebman Systems, Inc.

Conditions:

1. Customer will obtain permit if required by local jurisdiction.
2. South Shore Electric will supply 120VAC power where required.
3. Customer is responsible for setting up internet access, programming, switches, & routers to accept RSI's devices.
4. Customer will obtain alarm monitoring permit from local authorities if required by local jurisdiction.
5. Customer will supply / install internet connectivity.
6. Price does not include the creation and submitting of plans for approval to the authority having jurisdiction. This will be invoiced as an extra if required.
7. Proposal subject to approval from authority having jurisdiction. Additional requirements will be invoiced as change orders.
8. System will meet all state & local building codes.
9. South Shore Electric will install all equipment and hardware.
10. RSI's technician will train customer one-half hour on site.

Terms:

Balance due upon completion. Net 10 days. 1 ½% interest charged per month to past due accounts. If not accepted, proposal will expire after 30 days.

Acceptance of Proposal – By signing below, Buyer hereby acknowledges that Buyer has reviewed, approved and hereby accepts the above Proposal and all of its terms and conditions, including the Terms and Conditions listed below. Rebman Systems, Inc. is authorized to do the work as specified. Payment will be made as outlined above. Authorization below converts this proposal to a legally binding contract.

Authorized By: _____ Name: Kenneth G. Rebman
RSI REPRESENTATIVE

Accepted By: _____ Name: _____

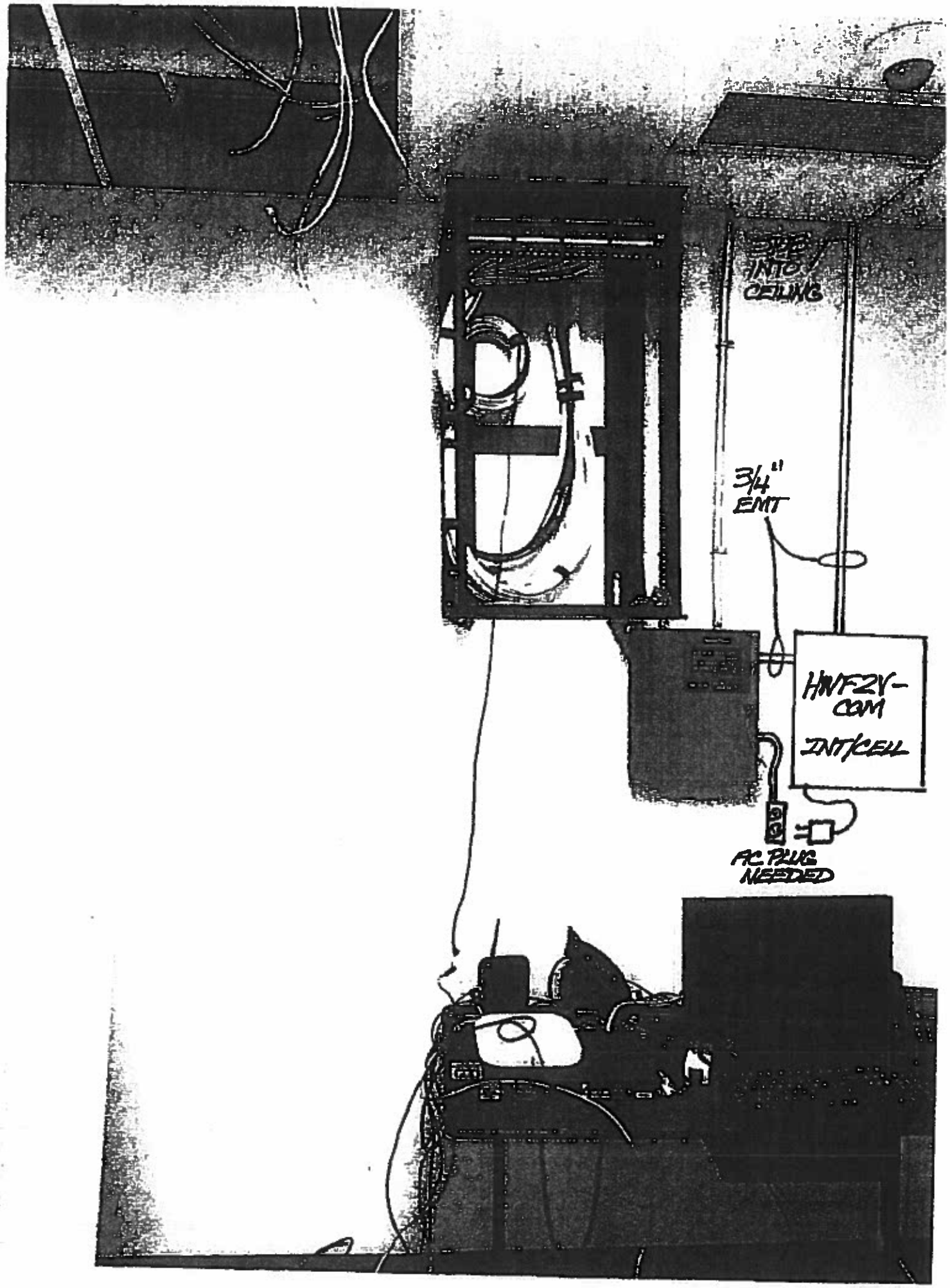
INTO CEILING
3/4" EMT
HNF2V-COM
INT/CELL
AC PLUG NEEDED

REM GRAPHICS & SIGNS LLC
567 E Turkeyfoot Lake Road Suite B 3, Akron, OH 44319-4107
330 896-0564
remsigns@remgraphics-signs.com

DATE: September 11, 2020

☒ QUOTATION ☐ SALES ORDER

PROJECT:	CUSTOMER PHONE:
Clearview Bus Garage Addendum # Alternate #	FAX: CELL: 440-773-9493

SOLD TO:	SHIP TO:
Seitz Builders Nick email:	SAME

Qty	Stock No.	Description	Unit Price	Amount
2	9½"W x 12"H	EVAC MAP HOLDERS, SAME AS PRIOR JOB #120-1109		
2	#540	SATIN SILVER FRAMES WITH MAGNET FOR ABOVE HOLDERS		
		TOTAL		$180.00
Taxable		Accepted by: _____ Date: ___/____/ 2020		
Yes ☐	No ☒	This must be signed, dated, returned to proceed.		
		All quotes are valid for 60 days from 9-10-20 and are subject to review at this time .		

Rory E. Mayer – REM Graphics

AIA® Document G701™ – 2017

Change Order

PROJECT: *(Name and address)*	CONTRACT INFORMATION:	CHANGE ORDER INFORMATION:
Clearview Bus Garage	Contract For: General Construction Date: February 12, 2020	Change Order Number: 012 Date: September 10, 2020
OWNER: *(Name and address)* Clearview Local School District 4700 Broadway Avenue Lorain, Ohio 44052	**ARCHITECT:** *(Name and address)* GPD Group 520 South Main Street Suite 2531 Akron, Ohio 44311	**CONTRACTOR:** *(Name and address)* Seitz Builders, Inc. 8055 Broadway Road Broadway Heights, Ohio 44147

THE CONTRACT IS CHANGED AS FOLLOWS:
(Insert a detailed description of the change and, if applicable, attach or reference specific exhibits. Also include agreed upon adjustments attributable to executed Construction Change Directives.)

PCOS #16 - Bell Painting, foundation and accent lighting - ADD $12,994.48

PCOS #17 - Conduit - DEDUCT $(3,012.52)

TOTAL FOR CHANGE ORDER #12 - ADD $9,981.96

The original Contract Sum was	$	1,687,000.00
The net change by previously authorized Change Orders	$	67,472.95
The Contract Sum prior to this Change Order was	$	1,754,472.95
The Contract Sum will be increased by this Change Order in the amount of	$	9,981.96
The new Contract Sum including this Change Order will be	$	1,764,454.91

The Contract Time will be increased by Zero (0) days.
The new date of Substantial Completion will be unchanged

NOTE: This Change Order does not include adjustments to the Contract Sum or Guaranteed Maximum Price, or the Contract Time, that have been authorized by Construction Change Directive until the cost and time have been agreed upon by both the Owner and Contractor, in which case a Change Order is executed to supersede the Construction Change Directive.

NOT VALID UNTIL SIGNED BY THE ARCHITECT, CONTRACTOR AND OWNER.

GPD Group ARCHITECT *(Firm name)*	Seitz Builders, Inc. CONTRACTOR *(Firm name)*	Clearview Local School District OWNER *(Firm name)*
SIGNATURE	Robert B. Seitz Digitally signed by Robert B. Seitz DN: cn=Robert B. Seitz, o=Seitz Builders, Inc., ou=President, email=robert@seitzbuilders.com, c=US Date: 2020.09.14 15:23:51 -04'00' SIGNATURE	Mary Ann Nowak SIGNATURE
Russell Gayheart, Project Architect PRINTED NAME AND TITLE	Bob Seitz PRINTED NAME AND TITLE	Mary Ann Nowak, Treasurer PRINTED NAME AND TITLE
September 10, 2020 DATE	DATE	9/12/2020 DATE

SEITZ BUILDERS, INC.

PRE-CHANGE ORDER SUMMARY AND ADDITIONAL WORK AUTHORIZATION OR FIELD CHANGE DIRECTIVE

P.C.O.S. #16 **PR 006 BELL REVISED**

SUBMITTED TO: RUSSELL GAYHEART
GPD GROUP

DATE: 9-9-2020

OWNER'S NAME: CLEARVIEW LOCAL SCHOOLS

JOB NAME: CLEARVIEW BUS GARAGE

EXISTING CONTRACT OR PROJECT NO. & DATE: 2018200.13 – FEBRUAURY 20,2020

SUMMARY OF CHANGES: PER YOUR REQUEST WE HAVE PRICED THE FOLLOWING:

SEE ATTACHED PRICING QUOTE.

8055 BROADVIEW ROAD * BROADVIEW HEIGHTS, OHIO 44147 * 440-838-1011 / FAX 440-838-1806

SEITZ BUILDERS, INC.

SEE ATTACHED QUOTES	$ 9,451.84
SOUTH SHORE REVISED PRICING ADD	$ 1,560.43
	$ -
	$ -
SEITZ BUILDERS , INC. HR.@ $75.00/HR COST OF SUPERVISION AND FIELD OFFICE PERSONNEL DIRECTLY ATTRIBUTED TO THIS CHANGE	$ -
SUBTOTAL	$ 11,012.27
OVERHEAD	$ 1,651.84
BOND AND INSURANCE	$ 330.37
TOTAL	$ 12,994.48

WE WILL REQUIRE A WRITTEN CHANGE ORDER ACCORDING TO THE CONTRACT DOCUMENTS. WE WILL NEED T.B.D. ADDITIONAL DAYS TO COMPLETE THIS WORK, PROVIDING A SIGNED CHANGE ORDER IN ACCORDANCE TO THE CONTRACT DOCUMENTS IS RECEIVED BEFORE 9-10-2020, IF NOT RECEIVED BEFORE THIS DATE THE ABOVE PRICING IS NULL AND VOID.

SIGNATURE: _____ DATE_____
OWNER

SIGNATURE: _____ DATE_____
SEITZ BUILDERS, INC.

NO WORK WILL COMMENCE UNTIL SIGNED ACCEPTANCE IS RECEIVED PER THE CONTRACT.

8055 BROADVIEW ROAD • BROADVIEW HEIGHTS, OHIO 44147 • 440-838-1011 / FAX 440-838-1806

SEITZ BUILDERS, INC.

CHANGE ORDER ARTICLES

(To be included with each Change Order agreement)

ARTICLE I

THIS CHANGE ORDER MAY CAUSE UNFORESEEN AND UNCONTEMPLATED DELAYS TO, HINDRANCES TO, INTERFERENCE'S WITH AND/OR DISRUPTIONS TO ORIGINAL CONTRACT WORK AND/OR TO OTHER CHANGE ORDER WORK. THE COSTS OF THOSE DELAYS, HINDRANCES, BOTH IN TIME AND MONEY ARE NOT PART OF THIS CHANGE ORDER AND THE RIGHT TO SUCH ADDITIONAL COSTS AND TIME IS SPECIFICALLY RESERVED AND NOT ACCORDED OR SATISFIED BY THIS CHANGE ORDER.

ARTICLE II

CHANGES TO AND EFFECTS UPON CONSTRUCTION SCHEDULES, AND ORIGINAL PERFORMANCE TIME, ORIGINAL COSTS, METHODS, MEANS, SEQUENCES AND PROCEDURES OF CONSTRUCTION OF ALL OTHER CONTRACT CHANGE ORDERS ARE NOT PART OF THIS CHANGE ORDER. ALL RIGHTS ARE RESERVED AND NOT ACCORDED OR SATISFIED REGARDING SUCH CHANGES AND EFFECTS.

ARTICLE III

THE AMOUNT (S) SET FORTH IN THIS CHANGE ORDER ARE FULL REIMBURSEMENT FOR THE DIRECT COST OF ALL LABOR, MATERIAL AND EQUIPMENT NECESSARY TO PERFORM THE WORK DESCRIBED IN THIS PRE-CHANGE ORDER SUMMARY ATTACHED. ALL RIGHTS ARE RESERVED AND ARE NOT ACCORDED OR SATISFIED BY THIS CHANGE ORDER REGARDING ADDITIONAL TIME REQUIRED OR ADDITIONAL COST INCURRED TO PERFORM ANY AND ALL OTHER WORK OF THIS CONTRACT (INCLUDING OTHER CHANGES ORDERS), CAUSED BY THIS CHANGE ORDER

8055 BROADVIEW ROAD * BROADVIEW HEIGHTS, OHIO 44147 * 440-838-1011 / FAX 440-838-1806

South Shore Electric, Inc.
589 Ternes Lane
Elyria, Ohio 44035

Phone 440-366-6289
Fax 440-366-6940
kbuckley@southshoreelectricinc.com

Date: September 8, 2020

To: Seitz Builders, Inc.
8055 Broadview Road
Broadview Hts., Ohio 44147

Attn.: Nicholas Hurst

Project: Clearview Bus Garage
From: South Shore Electric, Inc.
PCO: PR-006 - Rock, Bell and Flagpole Lighting - REVISED - Rock and Bell Lighting Only
SSEI CR# 07R2

Scope: provide lighting with foundations and circuitry for Rock and Bell ONLY per PR-006

Qty	Description	Mat Unit	Mat Ext		Labor unit	Labor Ext
1	rock floodlight	$207.00	$207.00		1.2	1.2
1	bell floodlight	$207.00	$207.00		1.2	1.2
0	flagpole floodlights	$197.00	$0.00		1.2	0
2	12" x 36" concrete foundations	$160.00	$320.00		2.6	5.2
40	trench and backfill	$12.00	$480.00		0.05	2
1	intercept existing pole lighting conduit	$25.00	$25.00		1.2	1.2
1	in-ground junction box with excavation	$208.00	$208.00		1.5	1.5
60	3/4" PVC Conduit	$0.50	$30.00		0.04	2.4
420	#8 THHN Wire	$0.36	$151.20		0.006	2.52
1	photocell with box	$26.00	$26.00		1.2	1.2
1	connect to spare circuit breaker	$1.00	$1.00		0.1	0.1
1	label, test, aim and energize	$5.00	$5.00		1	1
		Material	$1,660.20		Labor Hrs	19.52
		No Tax	$0.00		Labor$/hr	$73.54
		Mat Total	$1,660.20		Labor Total	$1,435.50
		M&L Subtotal		$3,095.70	M&L Subtotal	
		10% Markup		$309.57	10% Markup	
		Total		$3,405.27	Total	

This is our interpretation of the changes indicated in this Change Request. Please advise of any errors or ommissions.

Please issue a change order as authorization to proceed. Any questions, comments or concerns, please do not hesitate to contact me at my office at 440-366-6289, email at buckleyk@southshoreelectricinc.com or my cell at 216-389-5371

Respectfully submitted,

Keith A. Buckley
President
J:2019-Jobs/Clearview Bus Garage - PR-006R2 - SSEI Proposal 58-2020

$3405.27 REVISED
- 1844.84 PREVIOUS
$1560.43 ADDITIONAL COST

William Seitz

From:	Nick Hurst <nick.h@seitzbuilders.com>
Sent:	Wednesday, September 9, 2020 11:30 AM
To:	Gayheart, Russell
Cc:	'William Seitz'
Subject:	FW: RE: CBG - PR006 - PCOS#16 BELL
Attachments:	Clearview Bus Garage - PR-006R2 - SSEI Proposal 8-31-2020.pdf

Russell,

See below and attached from South Shore. Per our discussion this morning there was a misunderstanding on how the flagpole only pricing was adjusted from the previous, all inclusive (flagpole,rock,bell), pricing from South Shore. I mistakenly subtracted the flagpole pricing from overall total of electrical pricing, but that was not an accurate representation of work to ONLY perform bell/rock work.

Attached is the cost to fully perform electrical work for just the rock/bell. This pricing increased by 1,560.43. This is the amount that previous PCOS #16 total would increase.

Are we approved to formally revise this PCOS?

Nick

Sent from my Verizon, Samsung Galaxy smartphone

——— Original message ———
From: Keith Buckley <KBuckley@southshoreelectricinc.com>
Date: 9/9/20 8:42 AM (GMT-05:00)
To: William Seitz <william.seitz@seitzbuilders.com>, 'Nick Hurst' <nick.h@seitzbuilders.com>
Cc: robert.seitz@seitzbuilders.com
Subject: RE: CBG - PR006 - PCOS#16 BELL

See attached. Thanks

Keith A. Buckley

South Shore Electric, Inc.

589 Ternes Lane

Elyria, OH 44035

Office 440-366-6289

Cell 216-389-5371

kbuckley@southshoreelectricinc.com

From: William Seitz <william.seitz@seitzbuilders.com>
Sent: Wednesday, September 9, 2020 8:15 AM
To: 'Nick Hurst' <nick.h@seitzbuilders.com>; Keith Buckley <KBuckley@southshoreelectricinc.com>
Cc: robert.seitz@seitzbuilders.com
Subject: RE: CBG - PR006 - PCOS#16 BELL

Keith,

We need this asap please.

Thanks, Bill

William M. Seitz

Seitz Builders, Inc.

8055 Broadview Road

Broadview Heights, Ohio 44147

Phone: 440-838-1011 x11

Fax: 440-838-1806

From: Nick Hurst <nick.h@seitzbuilders.com>
Sent: Wednesday, September 9, 2020 7:27 AM
To: Keith Buckley <KBuckley@southshoreelectricinc.com>
Cc: 'William Seitz' <william.seitz@seitzbuilders.com>; robert.seitz@seitzbuilders.com
Subject: RE: CBG - PR006 - PCOS#16 BELL

Keith,

My mistake, i thought that the flagpole work could be subtracted from your total for all work to cover bell/rock. When submitting pricing, please send over cost (separately) to include a cellular/internet dial out for fire alarm.

Nick

Sent from my Verizon, Samsung Galaxy smartphone

——— Original message ———

From: Keith Buckley <KBuckley@southshoreelectricinc.com>

Date: 9/8/20 8:23 PM (GMT-05:00)

To: Nicholas Hurst <nick.h@seitzbuilders.com>

Cc: 'William Seitz' <william.seitz@seitzbuilders.com>, robert.seitz@seitzbuilders.com

Subject: RE: CBG - PR006 - PCOS#16 BELL

Nick,

We didn't price the bell and rock work....separately from the group.

We priced all of it (bell, rock and flagpole (with home run conduit and wire to all three) and the flagpole (with home run conduit and wire).....there is only one home run conduit and excavation for all three of these items. The bell and rock work is not simply deducting the flagpole work, as there would not be home run circuit or excavation.

We will price the bell and rock work.

Keith A. Buckley

South Shore Electric, Inc.

589 Ternes Lane

Elyria, OH 44035

Office 440-366-6289

Cell 216-389-5371

kbuckley@southshoreelectricinc.com

From: Nicholas Hurst <nick.h@seitzbuilders.com>
Sent: Tuesday, September 8, 2020 2:55 PM
To: Keith Buckley <KBuckley@southshoreelectricinc.com>; leifec11@gmail.com; 'steve lenhart' <estimator.sloanconcrete@yahoo.com>; 'Marc Papasodaro' <MPapasodaro@thomarios.com>
Cc: 'William Seitz' <william.seitz@seitzbuilders.com>; robert.seitz@seitzbuilders.com
Subject: CBG - PR006 - PCOS#16 BELL

Good afternoon all,

The owner has accepted the pricing for the PR006 for the BELL & ROCK WORK ONLY. They have decided to hold off on all aspects of the PR006 associated with the flagpole.

Please proceed in getting materials ready for this work. I will confirm the location of the bell base/foundation before we begin this work and will let you know when we can start with the foundation work (in conjuction with the rest of the phase 2 sitework).

Please let me know if you have any questions.

Thank You,

Nick Hurst

Superintendent

440.773.9493

Seitz Builders Inc.

8055 Broadview Rd

Broadview Heights, OH 44147

P: 440.838.1011

F: 440.838.1806

SEITZ BUILDERS, INC.

PRE-CHANGE ORDER SUMMARY AND ADDITIONAL WORK AUTHORIZATION OR FIELD CHANGE DIRECTIVE

P.C.O.S. #17 **PR 007 DELETE CONDUIT**

SUBMITTED TO: RUSSELL GAYHEART
GPD GROUP

DATE: 9-8-2020

OWNER'S NAME: CLEARVIEW LOCAL SCHOOLS

JOB NAME: CLEARVIEW BUS GARAGE

EXISTING CONTRACT OR PROJECT NO. & DATE: 2018200.13 – FEBRUAURY 20,2020

SUMMARY OF CHANGES: PER YOUR REQUEST WE HAVE PRICED THE FOLLOWING:

SEE ATTACHED PRICING QUOTE.

8055 BROADVIEW ROAD * BROADVIEW HEIGHTS, OHIO 44147 * 440-838-1011 / FAX 440-838-1806

SEITZ BUILDERS, INC.

SEE ATTACHED QUOTE	$ (2,924.78)
	$ -
	$ -
	$ -
SEITZ BUILDERS , INC. HR.@ $75.00/HR COST OF SUPERVISION AND FIELD OFFICE PERSONNEL DIRECTLY ATTRIBUTED TO THIS CHANGE	$ -
SUBTOTAL	$ (2,924.78)
OVERHEAD	$ -
BOND AND INSURANCE	$ (87.74)
TOTAL	$ (3,012.52)

WE WILL REQUIRE A WRITTEN CHANGE ORDER ACCORDING TO THE CONTRACT DOCUMENTS. WE WILL NEED T.B.D. ADDITIONAL DAYS TO COMPLETE THIS WORK, PROVIDING A SIGNED CHANGE ORDER IN ACCORDANCE TO THE CONTRACT DOCUMENTS IS RECEIVED BEFORE 9-15-2020, IF NOT RECEIVED BEFORE THIS DATE THE ABOVE PRICING IS NULL AND VOID.

SIGNATURE: _____ DATE_____
OWNER

SIGNATURE: _____ DATE_____
SEITZ BUILDERS, INC.

NO WORK WILL COMMENCE UNTIL SIGNED ACCEPTANCE IS RECEIVED PER THE CONTRACT.

8055 BROADVIEW ROAD * BROADVIEW HEIGHTS, OHIO 44147 * 440-838-1011 / FAX 440-838-1806

SEITZ BUILDERS, INC.

CHANGE ORDER ARTICLES

(To be included with each Change Order agreement)

ARTICLE I

THIS CHANGE ORDER MAY CAUSE UNFORESEEN AND UNCONTEMPLATED DELAYS TO, HINDRANCES TO, INTERFERENCE'S WITH AND/OR DISRUPTIONS TO ORIGINAL CONTRACT WORK AND/OR TO OTHER CHANGE ORDER WORK. THE COSTS OF THOSE DELAYS, HINDRANCES, BOTH IN TIME AND MONEY ARE NOT PART OF THIS CHANGE ORDER AND THE RIGHT TO SUCH ADDITIONAL COSTS AND TIME IS SPECIFICALLY RESERVED AND NOT ACCORDED OR SATISFIED BY THIS CHANGE ORDER.

ARTICLE II

CHANGES TO AND EFFECTS UPON CONSTRUCTION SCHEDULES, AND ORIGINAL PERFORMANCE TIME, ORIGINAL COSTS, METHODS, MEANS, SEQUENCES AND PROCEDURES OF CONSTRUCTION OF ALL OTHER CONTRACT CHANGE ORDERS ARE NOT PART OF THIS CHANGE ORDER. ALL RIGHTS ARE RESERVED AND NOT ACCORDED OR SATISFIED REGARDING SUCH CHANGES AND EFFECTS.

ARTICLE III

THE AMOUNT (S) SET FORTH IN THIS CHANGE ORDER ARE FULL REIMBURSEMENT FOR THE DIRECT COST OF ALL LABOR, MATERIAL AND EQUIPMENT NECESSARY TO PERFORM THE WORK DESCRIBED IN THIS PRE-CHANGE ORDER SUMMARY ATTACHED. ALL RIGHTS ARE RESERVED AND ARE NOT ACCORDED OR SATISFIED BY THIS CHANGE ORDER REGARDING ADDITIONAL TIME REQUIRED OR ADDITIONAL COST INCURRED TO PERFORM ANY AND ALL OTHER WORK OF THIS CONTRACT (INCLUDING OTHER CHANGES ORDERS), CAUSED BY THIS CHANGE ORDER

8055 BROADVIEW ROAD • BROADVIEW HEIGHTS, OHIO 44147 • 440-838-1011 / FAX 440-838-1806

South Shore Electric, Inc.
589 Ternes Lane
Elyria, Ohio 44035

Phone 440-366-6289
Fax 440-366-6940
kbuckley@southshoreelectricinc.com

Date: July 29, 2020

To: Seitz Builders, Inc.
8055 Broadview Road
Broadview Hts., Ohio 44147

Attn.: Nicholas Hurst

Project: Clearview Bus Garage
From: South Shore Electric, Inc.
PCO: PR-007 - Delete Conduit
SSEI CR# 08

Scope: delete conduit for technology wiring in open areas of garage per RFI-022 Response
provide "J" hooks in lieu of conduit

Qty	Description	Mat Unit	Mat Ext		Labor unit	Labor Ext
-4	4" Sq Box w/cover & support	$5.00	-$20.00		0.5	-2
-220	1" EMT conduit with fittings	$1.80	-$396.00		0.06	-13.2
-520	3/4" EMT conduit with fittings	$1.20	-$624.00		0.05	-26
118	"J" hooks with beam clamp or support	$2.35	$277.30		0.1	11.8
0	Drawing Updates	$2.00	$0.00		0.1	0
		Material	-$762.70		Labor Hrs	-29.4
		No Tax	$0.00		Labor$/hr	$73.54
		Mat Total	-$762.70		Labor Total	-$2,162.08
		M&L Total		-$2,924.78	M&L Total	

This is our interpretation of the changes indicated in this Change Request. Please advise of any errors or ommissions.

Please issue a change order as authorization to proceed. Any questions, comments or concerns, please do not hesitate to contact me at my office at 440-366-6289, email at buckleyk@southshoreelectricinc.com or my cell at 216-389-5371

Respectfully submitted,

Keith A. Buckley
President

J:2019-Jobs/Clearview Bus Garage PR-007 SSEI Proposal 9-2-2020

AIA® Document G709™ – 2018

Proposal Request

PROJECT: *(name and address)* Clearview Bus Garage	**CONTRACT INFORMATION:** Contract For: General Construction Date: February 12, 2020	Architect's Project Number: 2018200.13 Proposal Request Number: 007 Proposal Request Date: 8-20-20
OWNER: *(name and address)* Clearview Local School District 4700 Broadway Avenue Lorain, Ohio 44052	**ARCHITECT:** *(name and address)* GPD Group 520 South Main Street Suite 2531 Akron, Ohio 44311	**CONTRACTOR:** *(name and address)* Seitz Builders, Inc. 8055 Broadway Road Broadway Heights, Ohio 44147

The Owner requests an itemized proposal for changes to the Contract Sum and Contract Time for proposed modifications to the Contract Documents described herein. The Contractor shall submit this proposal within fourteen (14) days or notify the Architect in writing of the anticipated date of submission.
(Insert a detailed description of the proposed modifications to the Contract Documents and, if applicable, attach or reference specific exhibits.)

Provide material/labor cost for the deduct conduit installation above 12'-0" in the open areas in the garage per RFI-022 response.

Attachments: None.

THIS IS NOT A CHANGE ORDER, A CONSTRUCTION CHANGE DIRECTIVE, OR A DIRECTION TO PROCEED WITH THE WORK DESCRIBED IN THE PROPOSED MODIFICATIONS.

REQUESTED BY THE ARCHITECT:

Russell Gayheart, Project Architect
PRINTED NAME AND TITLE

AIA Document G701 – 2017

Change Order

PROJECT: *(Name and address)*	CONTRACT INFORMATION:	CHANGE ORDER INFORMATION:
Clearview Bus Garage	Contract For: General Construction Date: February 12, 2020	Change Order Number: 011 Date: August 18, 2020
OWNER: *(Name and address)*	**ARCHITECT:** *(Name and address)*	**CONTRACTOR:** *(Name and address)*
Clearview Local School District 4700 Broadway Avenue Lorain, Ohio 44052	GPD Group 520 South Main Street Suite 2531 Akron, Ohio 44311	Seitz Builders, Inc. 8055 Broadway Road Broadway Heights, Ohio 44147

THE CONTRACT IS CHANGED AS FOLLOWS:
(Insert a detailed description of the change and, if applicable, attach or reference specific exhibits. Also include agreed upon adjustments attributable to executed Construction Change Directives.)

PCOS #14 – Technology Revisions and Door hardware modifications: $415.69

Per the direction of Seitz Builders this change order is issued as a zero dollar cost change order for record.

The original Contract Sum was	$	1,687,000.00
The net change by previously authorized Change Orders	$	67,472.95
The Contract Sum prior to this Change Order was	$	1,754,472.95
The Contract Sum will be unchanged by this Change Order in the amount of	$	0.00
The new Contract Sum including this Change Order will be	$	1,754,472.95

The Contract Time will be unchanged by Zero (0) days
The new date of Substantial Completion will be unchanged

NOTE: This Change Order does not include adjustments to the Contract Sum or Guaranteed Maximum Price, or the Contract Time, that have been authorized by Construction Change Directive until the cost and time have been agreed upon by both the Owner and Contractor, in which case a Change Order is executed to supersede the Construction Change Directive.

NOT VALID UNTIL SIGNED BY THE ARCHITECT, CONTRACTOR AND OWNER.

GPD Group	Seitz Builders, Inc.	Clearview Local School District
ARCHITECT *(Firm name)*	CONTRACTOR *(Firm name)*	OWNER *(Firm name)*
SIGNATURE	Robert B. Seitz Digitally signed by Robert B. Seitz DN: cn=Robert B. Seitz, o=Seitz Builders, Inc., ou=President, email=robert.seitz@seitzbuilders.com, c=US Date: 2020.08.18 13:36:03 -04'00' SIGNATURE	Mary Ann Nowak SIGNATURE
Russell Gayheart, Project Architect	Bob Seitz, President	Mary Ann Nowak, Treasurer
PRINTED NAME AND TITLE	PRINTED NAME AND TITLE	PRINTED NAME AND TITLE
August 18, 2020		8/18/2020
DATE	DATE	DATE

Selle, Debby

From: Gayheart, Russell
Sent: Thursday, August 13, 2020 3:30 PM
To: Selle, Debby
Subject: FW: CLEARVIEW PCOS #14 PR 005 COST REVISED
Attachments: CLEARVIEW PCOS #14 PR005 COST.pdf

This will be Change Order #11.

Please note this is a ZERO COST change order, please print the email below to include in the attachments.

Thanks,

Russell Gayheart, AIA, LEED AP BD+C
Architect
Licensed in OH

GPD GROUP
ARCHITECTS • ENGINEERS • PLANNERS
T: 330.572.3525 / M: 330.806.8388 / F: 330.572.2101
520 South Main Street, Suite 2531, Akron, OH 44311

From: William Seitz <william.seitz@seitzbuilders.com>
Sent: Thursday, August 13, 2020 2:12 PM
To: Gayheart, Russell <rgayheart@gpdgroup.com>
Cc: 'Mary Ann Nowak' <maryann.nowak@clearviewschools.org>; 'ROBERT B SEITZ' <robert.seitz@seitzbuilders.com>; Nicholas Hurst <nick.h@seitzbuilders.com>
Subject: CLEARVIEW PCOS #14 PR 005 COST REVISED

Russell,

Please see attached PCOS #005 cost revised.

Both GPD and the Clearview School District have been very reasonable to work with.

Therefore, we will pick up the additional cost for the increase in number of corner guards and Nick will install them so, there will be no labor charge from Vicon.

You can issue this as a zero dollar cost change order for record.

Thanks, Bill

William M. Seitz
Seitz Builders, Inc.
8055 Broadview Road
Broadview Heights, Ohio 44147

Phone: 440-838-1011 x11

SEITZ BUILDERS, INC.

PRE-CHANGE ORDER SUMMARY AND ADDITIONAL WORK AUTHORIZATION OR FIELD CHANGE DIRECTIVE

P.C.O.S. #14 **REVISED PR005 COST**

SUBMITTED TO: RUSSELL GAYHEART
GPD GROUP

DATE: 8-13-2020

OWNER'S NAME: CLEARVIEW LOCAL SCHOOLS

JOB NAME: CLEARVIEW BUS GARAGE

EXISTING CONTRACT OR PROJECT NO. & DATE: 2018200.13 – FEBRUAURY 20,2020

SUMMARY OF CHANGES: PER YOUR REQUEST WE HAVE PRICED THE FOLLOWING:

SEE ATTACHED PRICING QUOTE.

8055 BROADVIEW ROAD * BROADVIEW HEIGHTS, OHIO 44147 * 440-838-1010 / FAX 440-838-1806

Fax: 440-838-1806

SEITZ BUILDERS, INC.

SEE ATTACHED QUOTE FROM SOUTH SHORE	$ -
SEE ATTACHED FROM CLEVELAND VICON	$ (1,072.72)
SEE ATTACHED EMAIL COST FROM CLEVELAND VICON FOR CORNER GUARD	$ 1,150.00
	$ 275.00

SEITZ BUILDERS , INC. HR.@ $75.00/HR COST OF SUPERVISION AND FIELD OFFICE PERSONNEL DIRECTLY ATTRIBUTED TO THIS CHANGE	$ -
SUBTOTAL	$ 352.28
OVERHEAD	$ 52.84
BOND AND INSURANCE	$ 10.57
TOTAL	$ 415.69

WE WILL REQUIRE A WRITTEN CHANGE ORDER ACCORDING TO THE CONTRACT DOCUMENTS. WE WILL NEED T.B.D. ADDITIONAL DAYS TO COMPLETE THIS WORK, PROVIDING A SIGNED CHANGE ORDER IN ACCORDANCE TO THE CONTRACT DOCUMENTS IS RECEIVED BEFORE 8-20-2020, IF NOT RECEIVED BEFORE THIS DATE THE ABOVE PRICING IS NULL AND VOID.

SIGNATURE: _____ DATE_____
OWNER

SIGNATURE: _____ DATE_____
SEITZ BUILDERS, INC.

NO WORK WILL COMMENCE UNTIL SIGNED ACCEPTANCE IS RECEIVED PER THE CONTRACT.

8055 BROADVIEW ROAD * BROADVIEW HEIGHTS, OHIO 44147 * 440-838-1011 / FAX 440-838-1806

SEITZ BUILDERS, INC.

CHANGE ORDER ARTICLES

(To be included with each Change Order agreement)

ARTICLE I

THIS CHANGE ORDER MAY CAUSE UNFORESEEN AND UNCONTEMPLATED DELAYS TO, HINDRANCES TO, INTERFERENCE'S WITH AND/OR DISRUPTIONS TO ORIGINAL CONTRACT WORK AND/OR TO OTHER CHANGE ORDER WORK. THE COSTS OF THOSE DELAYS, HINDRANCES, BOTH IN TIME AND MONEY ARE NOT PART OF THIS CHANGE ORDER AND THE RIGHT TO SUCH ADDITIONAL COSTS AND TIME IS SPECIFICALLY RESERVED AND NOT ACCORDED OR SATISFIED BY THIS CHANGE ORDER.

ARTICLE II

CHANGES TO AND EFFECTS UPON CONSTRUCTION SCHEDULES, AND ORIGINAL PERFORMANCE TIME, ORIGINAL COSTS, METHODS, MEANS, SEQUENCES AND PROCEDURES OF CONSTRUCTION OF ALL OTHER CONTRACT CHANGE ORDERS ARE NOT PART OF THIS CHANGE ORDER. ALL RIGHTS ARE RESERVED AND NOT ACCORDED OR SATISFIED REGARDING SUCH CHANGES AND EFFECTS.

ARTICLE III

THE AMOUNT (S) SET FORTH IN THIS CHANGE ORDER ARE FULL REIMBURSEMENT FOR THE DIRECT COST OF ALL LABOR, MATERIAL AND EQUIPMENT NECESSARY TO PERFORM THE WORK DESCRIBED IN THIS PRE-CHANGE ORDER SUMMARY ATTACHED. ALL RIGHTS ARE RESERVED AND ARE NOT ACCORDED OR SATISFIED BY THIS CHANGE ORDER REGARDING ADDITIONAL TIME REQUIRED OR ADDITIONAL COST INCURRED TO PERFORM ANY AND ALL OTHER WORK OF THIS CONTRACT (INCLUDING OTHER CHANGES ORDERS), CAUSED BY THIS CHANGE ORDER

8055 BROADVIEW ROAD * BROADVIEW HEIGHTS, OHIO 44147 * 440-838-1011 / FAX 440-838-1806

AIA® Document G709™ – 2018

Proposal Request

PROJECT: *(name and address)* Clearview Bus Garage	**CONTRACT INFORMATION:** Contract For: General Construction Date: February 12, 2020	Architect's Project Number: 2018200.13 Proposal Request Number: 005 Proposal Request Date: July 2, 2020
OWNER: *(name and address)* Clearview Local School District 4700 Broadway Avenue Lorain, Ohio 44052	**ARCHITECT:** *(name and address)* GPD Group 520 South Main Street Suite 2531 Akron, Ohio 44311	**CONTRACTOR:** *(name and address)* Seitz Builders, Inc. 8055 Broadway Road Broadway Heights, Ohio 44147

The Owner requests an itemized proposal for changes to the Contract Sum and Contract Time for proposed modifications to the Contract Documents described herein. The Contractor shall submit this proposal within fourteen (14) days or notify the Architect in writing of the anticipated date of submission.
(Insert a detailed description of the proposed modifications to the Contract Documents and, if applicable, attach or reference specific exhibits.)

See attached T-001 and T-101 for revisions per an Owner directed change. The district/technology consultant will provide and make final connections for APs and Cameras. See below for brief summary of the revisions.

1. Revised description for camera and access points. to be provided and installed by owner. Contractor shall provide install cabling/connector.
2. The basis of design has been revised - removed description of camera for cctv. Cctv shall be provided and installed by owner. See revised camera description.
3. Interior cctv camera layout and quantity in garage and work area has been revised.
4. Exterior cctv camaras have been added, as indicated on attached sheet.
5. The Wi-Fi antenna location has been revised.
6. The work associated with the bus radio station has been removed from this scope of work.
7. The data device configuration has been revised to (2) data, (1) voice.
8. Data rack location has been added to room 110.
9. Wifi equipment has been relocated to room 110.

Attachments: T-001 and T-101

THIS IS NOT A CHANGE ORDER, A CONSTRUCTION CHANGE DIRECTIVE, OR A DIRECTION TO PROCEED WITH THE WORK DESCRIBED IN THE PROPOSED MODIFICATIONS.

REQUESTED BY THE ARCHITECT:

Russell Gayheart, Project Architect
PRINTED NAME AND TITLE

TECHNOLOGY PATHWAYS LEGEND

STRUCTURED CABLING LEGEND

SECURITY SYSTEMS LEGEND

TECHNOLOGY ABBREVIATIONS

GENERAL NOTES

BASIS OF DESIGN

GPD GROUP

T-001

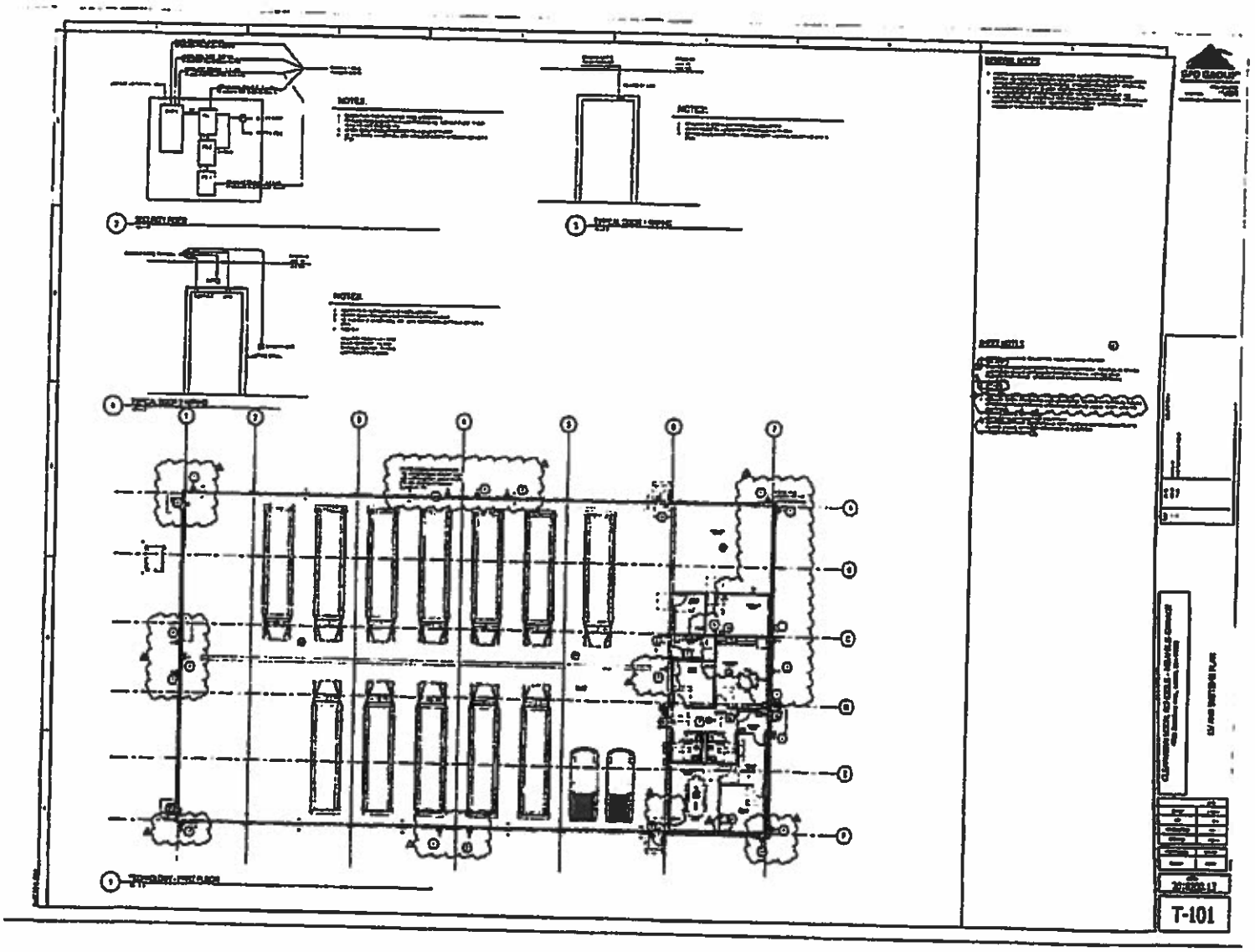
T-101

South Shore Electric, Inc.
589 Ternes Lane
Elyria, Ohio 44035

Phone 440-366-6289
Fax 440-366-6940
kbuckley@southshoreelectricinc.com

Date: July 29, 2020

To: Seitz Builders, Inc.
8055 Broadview Road
Broadview Hts., Ohio 44147

Attn.: Nicholas Hurst

Project: Clearview Bus Garage
From: South Shore Electric, Inc.
PCO: PR-005 - CCTV Changes
SSEI CR# 04

Scope: Delete CCTV cameras and conduit/wire per original drawings, provide conduit and wire only for 18 cameras to be furnished by Owner. Cameras and headend to be furnished and installed by Owner.
change office devices/add cabling to 2data/1voice in lieu of 1data/1voice
add patch panel as a result of added cabling.

Qty	Description	Mat Unit	Mat Ext		Labor unit	Labor Ext
1	credit for original scope:	$0.00	$0.00		0	0
-1	LS5 Head End and Cameras (quote)	$7,500.00	-$7,500.00		0	0
-6	camera install	$12.00	-$72.00		0.05	-0.3
-6	4" Sq Box w/cover & support	$5.00	-$30.00		0.5	-3
-310	3/4" EMT conduit with fittings	$1.20	-$372.00		0.05	-15.5
-660	Cat6 Cable	$0.36	-$237.60		0.008	-5.28
-6	jacks with faceplate/housing	$10.00	-$60.00		0.25	-1.5
-12	Cat6 termination/label/testing	$8.00	-$96.00		0.4	-4.8
1	Add 18 camera locations:	$0.00	$0.00		0	0
16	penetration for outdoor cameras	$10.00	$160.00		0.35	5.6
18	4" Sq Box w/cover & support	$5.00	$90.00		0.5	9
220	1" EMT conduit with fittings	$1.80	$396.00		0.06	13.2
340	3/4" EMT conduit with fittings	$1.20	$408.00		0.05	17
2300	Cat6 Cable	$0.36	$828.00		0.008	18.4
18	jacks with faceplate/housing	$10.00	$180.00		0.25	4.5
36	Cat6 termination/label/testing	$8.00	$288.00		0.4	14.4
6	change office devices to 2data/1voice	$0.00	$0.00		0	0
320	Cat6 Cable	$0.36	$115.20		0.008	2.56
6	jacks with faceplate/housing	$10.00	$60.00		0.25	1.5
12	Cat6 termination/label/testing	$8.00	$96.00		0.4	4.8
1	24port patch panel	$233.25	$233.25		1	1
1	Drawing Updates	$2.00	$2.00		0.1	0.1
		Material	-$5,511.15		Labor Hrs	61.68
		No Tax	$0.00		Labor$/hr	$73.54
		Mat Total	-$5,511.15		Labor Total	$4,535.95
		M&L Subtotal		-$975.20	M&L Subtotal	
		10% Markup		-$97.52	10% Markup	
		Total		-$1,072.72	Total	

This is our interpretation of the changes indicated in this Change Request Please advise of any errors or ommissions.

Please issue a change order as authorization to proceed. Any questions, comments or concerns, please do not hesitate to contact me at my office at 440-366-6289, email at buckleyk@southshoreelectricinc.com or my cell at 216-389-5371

Respectfully submitted,

Keith A. Buckley
President

J:2019-jobs/Clearview Bus Garage PR-005 SSEI Proposal 7-29-2020

Nicholas Hurst

From: Evan Grasse <evan_grasse@clevelandvicon.com>
Sent: Tuesday, August 11, 2020 9:31 AM
To: Nicholas Hurst
Subject: RE: Clearview - Corner Guard

Nick,

Per our conversation, cost for the 2 additional locks and having our guys prep the doors/ install the locks would be $1150.00. If approved, we could get all this done while they are on site Friday. Paul just confirmed Friday for Bryce to come get the alterations.

Thank you!

Evan Grasse
Contract Sales Rep.
Cleveland Vicon Co., Inc.
4550 Willow Parkway
Cleveland, OH 44125
Office: 216.341.3300
Fax: 216.341.1872

From: Nicholas Hurst <nick.h@seitzbuilders.com>
Sent: Tuesday, August 11, 2020 8:37 AM
To: Evan Grasse <evan_grasse@clevelandvicon.com>
Subject: FW: Clearview - Corner Guard

Proceed with this order per the architect below. Please advise when to expect delivery.

Thank You,
Nick Hurst
Superintendent
440.773.9493
Seitz Builders Inc.
8055 Broadview Rd
Broadview Heights, OH 44147
P: 440.838.1011
F: 440.838.1806

William Seitz

From: Nicholas Hurst <nick.h@seitzbuilders.com>
Sent: Wednesday, August 12, 2020 8:17 AM
To: 'William Seitz'
Cc: 'ROBERT B SEITZ'
Subject: FW: Clearview -PR005 REVISED pricing - 8/12/2020
Attachments: PR 005.pdf; PR005 REVISED pricing & backup.pdf

See attached and below.

Russell/school district requested the switchout of some locksets for added accessibility on the west end of the building doors.

Please process this REVISED PR005 pricing into a REVISED PCOS for processing.

Total cost change is an ADD of $77.28

Thank You,
Nick Hurst
Superintendent
440.773.9493
Seitz Builders Inc.
8055 Broadview Rd
Broadview Heights, OH 44147
P: 440.838.1011
F: 440.838.1806

From: Gayheart, Russell <rgayheart@gpdgroup.com>
Sent: Tuesday, August 11, 2020 12:08 PM
To: Nicholas Hurst <nick.h@seitzbuilders.com>
Subject: RE: Clearview - Corner Guard

Please add the locksets to the previous PCOS#005. This should nearly Zero out.

Give me a call if you have any questions.

Also, please clarify my comment about the RFI 022 response and the deduct PR. I can make this PR today, but wanted to clarify with you first.

Thanks,

Russell Gayheart, AIA, LEED AP BD+C
Architect
Licensed in OH

GPD GROUP
ARCHITECTS · ENGINEERS · PLANNERS
T: 330.572.3525 / M: 330.806.8388 / F: 330.572.2101
520 South Main Street, Suite 2531, Akron, OH 44311

From: Nicholas Hurst <nick.h@seitzbuilders.com>
Sent: Tuesday, August 11, 2020 10:12 AM
To: Gayheart, Russell <rgayheart@gpdgroup.com>
Subject: FW: Clearview - Corner Guard

Russell,

See below from Vicon. This is per your conversation with him earlier today considering the cost of the card readers.

Please advise how to proceed, and how to formalize this add on to PR005. Will this be sent in separately or do you want us to revise the previously submitted PR005 PCOS?

Thank You,
Nick Hurst
Superintendent
440.773.9493
Seitz Builders Inc.
8055 Broadview Rd
Broadview Heights, OH 44147
P: 440.838.1011
F: 440.838.1806

From: Evan Grasse <evan_grasse@clevelandvicon.com>
Sent: Tuesday, August 11, 2020 9:31 AM
To: Nicholas Hurst <nick.h@seitzbuilders.com>
Subject: RE: Clearview - Corner Guard

Nick,

Per our conversation, cost for the 2 additional locks and having our guys prep the doors/ install the locks would be $1150.00. If approved, we could get all this done while they are on site Friday. Paul just confirmed Friday for Bryce to come get the alterations.

Thank you!

Evan Grasse
Contract Sales Rep.
Cleveland Vicon Co., Inc.
4550 Willow Parkway
Cleveland, OH 44125
Office: 216.341.3300
Fax: 216.341.1872

From: Nicholas Hurst <nick.h@seitzbuilders.com>
Sent: Tuesday, August 11, 2020 8:37 AM
To: Evan Grasse <evan_grasse@clevelandvicon.com>
Subject: FW: Clearview - Corner Guard

Proceed with this order per the architect below. Please advise when to expect delivery.

Thank You,
Nick Hurst
Superintendent
440.773.9493
Seitz Builders Inc.
8055 Broadview Rd
Broadview Heights, OH 44147
P: 440.838.1011
F: 440.838.1806

From: Gayheart, Russell <rgayheart@gpdgroup.com>
Sent: Thursday, August 6, 2020 2:49 PM
To: Evan Grasse <evan_grasse@clevelandvicon.com>; Gregory Poe <greg_poe@clevelandvicon.com>
Cc: Nicholas Hurst <nick.h@seitzbuilders.com>
Subject: RE: Clearview - Corner Guard

Yeah, let's just do (1) 6'-0" section.

Since the contract is ran through Seitz, just work with them, otherwise I don't know how to process this cost.

Thanks,

Russell Gayheart, AIA, LEED AP BD+C
Architect
Licensed in OH

GPD GROUP
ARCHITECTS • ENGINEERS • PLANNERS
T: 330.572.3525 / M: 330.806.8388 / F: 330.572.2101
520 South Main Street, Suite 2531, Akron, OH 44311

From: Evan Grasse <evan_grasse@clevelandvicon.com>
Sent: Thursday, August 6, 2020 2:15 PM
To: Gayheart, Russell <rgayheart@gpdgroup.com>; Gregory Poe <greg_poe@clevelandvicon.com>
Subject: RE: Clearview - Corner Guard

Russell,

Material cost would be about $150.00. Cost to have us come out and install it would be about $200, unless Nick wants Seitz to handle it.

1-6' CORNER GUARD

$75.- $12.75

Thank you!

Evan Grasse
Contract Sales Rep.
Cleveland Vicon Co., Inc.
4550 Willow Parkway
Cleveland, OH 44125
Office: 216.341.3300
Fax: 216.341.1872

From: Gayheart, Russell <rgayheart@gpdgroup.com>
Sent: Thursday, August 06, 2020 2:05 PM
To: Evan Grasse <evan_grasse@clevelandvicon.com>; Gregory Poe <greg_poe@clevelandvicon.com>
Subject: RE: Clearview - Corner Guard

What cost would this have, installed? We're getting tight on budget with the project, as it's nearly complete.

Russell Gayheart, AIA, LEED AP BD+C
Architect
Licensed in OH

GPD GROUP
ARCHITECTS · ENGINEERS · PLANNERS
T: 330.572.3525 / M: 330.806.8388 / F: 330.572.2101
520 South Main Street, Suite 2531, Akron, OH 44311

From: Evan Grasse <evan_grasse@clevelandvicon.com>
Sent: Thursday, August 6, 2020 1:59 PM
To: Gayheart, Russell <rgayheart@gpdgroup.com>; Gregory Poe <greg_poe@clevelandvicon.com>
Subject: RE: Clearview - Corner Guard

Russell,

We can get them up to 6' long on a special order. I have attached the cut sheet for the product for approval. Depending on the overall height, we could just do 2 6' pieces to cover the overall height. Let me know if this works for you and we will get pricing together.

Thank you!

Evan Grasse
Contract Sales Rep.

Cleveland Vicon Co., Inc.
4550 Willow Parkway
Cleveland, OH 44125
Office: 216.341.3300
Fax: 216.341.1872

From: Gayheart, Russell <rgayheart@gpdgroup.com>
Sent: Thursday, August 06, 2020 10:59 AM
To: Gregory Poe <greg_poe@clevelandvicon.com>
Cc: Evan Grasse <evan_grasse@clevelandvicon.com>
Subject: Clearview - Corner Guard

Could you provide a stainless steel corner guard at the location, preferably full height (approximately 12'-0")?

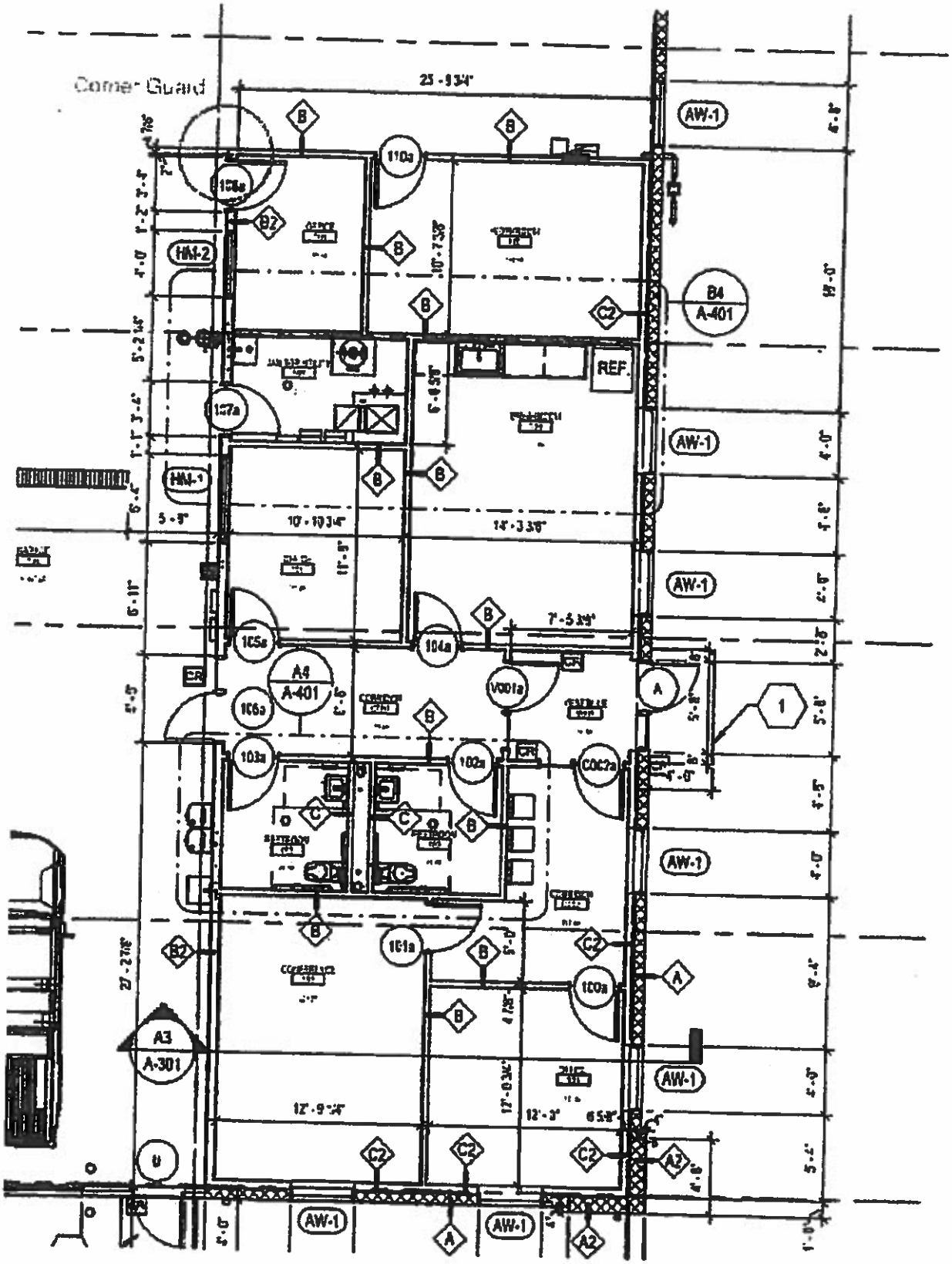

Our standard plastic corner guard won't hold up for this application.

Thanks,

Russell Gayheart, AIA, LEED AP BD+C

Architect
Licensed in OH

GPD GROUP
ARCHITECTS • ENGINEERS • PLANNERS
T: 330.572.3525 / M: 330.806.8388 / F: 330.572.2101
520 South Main Street, Suite 2531, Akron, OH 44311

AIA Document G701™ – 2017

Change Order

PROJECT: *(Name and address)*	CONTRACT INFORMATION:	CHANGE ORDER INFORMATION:
Clearview Bus Garage	Contract For: General Construction Date: February 12, 2020	Change Order Number: 013 Date: September 15, 2020
OWNER: *(Name and address)* Clearview Local School District 4700 Broadway Avenue Lorain, Ohio 44052	**ARCHITECT:** *(Name and address)* GPD Group 520 South Main Street Suite 2531 Akron, Ohio 44311	**CONTRACTOR:** *(Name and address)* Seitz Builders, Inc. 8055 Broadway Road Broadway Heights, Ohio 44147

THE CONTRACT IS CHANGED AS FOLLOWS:
(Insert a detailed description of the change and, if applicable, attach or reference specific exhibits. Also include agreed upon adjustments attributable to executed Construction Change Directives.)

PCOS #18 Bottle Filler Retrofit: $1,357.00

The original Contract Sum was	$	1,687,000.00
The net change by previously authorized Change Orders	$	77,454.91
The Contract Sum prior to this Change Order was	$	1,764,454.91
The Contract Sum will be increased by this Change Order in the amount of	$	1,357.00
The new Contract Sum including this Change Order will be	$	1,765,811.91

The Contract Time will be unchanged by Zero (0) days.
The new date of Substantial Completion will be unchanged

NOTE: This Change Order does not include adjustments to the Contract Sum or Guaranteed Maximum Price, or the Contract Time, that have been authorized by Construction Change Directive until the cost and time have been agreed upon by both the Owner and Contractor, in which case a Change Order is executed to supersede the Construction Change Directive.

NOT VALID UNTIL SIGNED BY THE ARCHITECT, CONTRACTOR AND OWNER.

GPD Group **ARCHITECT** *(Firm name)*	Seitz Builders, Inc. **CONTRACTOR** *(Firm name)*	Clearview Local School District **OWNER** *(Firm name)*
SIGNATURE	Robert B. Seitz Digitally signed by Robert B. Seitz DN: cn=Robert B. Seitz, o=Seitz Builders, Inc., ou=President, email=robert.seitz@seitzbuilders.com, c=US Date: 2020.09.15 13:51:47 -04'00' **SIGNATURE**	Mary Ann Nowak **SIGNATURE**
Russell Gayheart, Project Architect **PRINTED NAME AND TITLE**	Bob Seitz **PRINTED NAME AND TITLE**	Mary Ann Nowak, Treasurer **PRINTED NAME AND TITLE**
September 15, 2020 **DATE**	**DATE**	9/15/2020 **DATE**

SEITZ BUILDERS, INC.

PRE-CHANGE ORDER SUMMARY AND ADDITIONAL WORK AUTHORIZATION OR FIELD CHANGE DIRECTIVE

P.C.O.S. ~~#15~~ #18 **PR 008 DRINKING FOUNTAIN**

SUBMITTED TO: RUSSELL GAYHEART
GPD GROUP

DATE: 9-8-2020

OWNER'S NAME: CLEARVIEW LOCAL SCHOOLS

JOB NAME: CLEARVIEW BUS GARAGE

EXISTING CONTRACT OR PROJECT NO. & DATE: 2018200.13 – FEBRUAURY 20,2020

SUMMARY OF CHANGES: PER YOUR REQUEST WE HAVE PRICED THE FOLLOWING:

SEE ATTACHED PRICING QUOTE.

8055 BROADVIEW ROAD • BROADVIEW HEIGHTS, OHIO 44147 • 440-838-1011 / FAX 440-838-1806

SEITZ BUILDERS, INC.

SEE ATTACHED QUOTE	$ 1,150.00
	$ -
	$ -
	$ -
SEITZ BUILDERS , INC. HR.@ $75.00/HR COST OF SUPERVISION AND FIELD OFFICE PERSONNEL DIRECTLY ATTRIBUTED TO THIS CHANGE	$ -
SUBTOTAL	$ 1,150.00
OVERHEAD	$ 172.50
BOND AND INSURANCE	$ 34.50
TOTAL	$ 1,357.00

WE WILL REQUIRE A WRITTEN CHANGE ORDER ACCORDING TO THE CONTRACT DOCUMENTS. WE WILL NEED T.B.D. ADDITIONAL DAYS TO COMPLETE THIS WORK, PROVIDING A SIGNED CHANGE ORDER IN ACCORDANCE TO THE CONTRACT DOCUMENTS IS RECEIVED BEFORE 9-15-2020, IF NOT RECEIVED BEFORE THIS DATE THE ABOVE PRICING IS NULL AND VOID.

SIGNATURE: _____ DATE_____
OWNER

SIGNATURE: _____ DATE_____
SEITZ BUILDERS, INC.

NO WORK WILL COMMENCE UNTIL SIGNED ACCEPTANCE IS RECEIVED PER THE CONTRACT.

8055 BROADVIEW ROAD * BROADVIEW HEIGHTS, OHIO 44147 * 440-838-1011 / FAX 440-838-1806

SEITZ BUILDERS, INC.

CHANGE ORDER ARTICLES

(To be included with each Change Order agreement)

ARTICLE I

THIS CHANGE ORDER MAY CAUSE UNFORESEEN AND UNCONTEMPLATED DELAYS TO, HINDRANCES TO, INTERFERENCE'S WITH AND/OR DISRUPTIONS TO ORIGINAL CONTRACT WORK AND/OR TO OTHER CHANGE ORDER WORK. THE COSTS OF THOSE DELAYS, HINDRANCES, BOTH IN TIME AND MONEY ARE NOT PART OF THIS CHANGE ORDER AND THE RIGHT TO SUCH ADDITIONAL COSTS AND TIME IS SPECIFICALLY RESERVED AND NOT ACCORDED OR SATISFIED BY THIS CHANGE ORDER.

ARTICLE II

CHANGES TO AND EFFECTS UPON CONSTRUCTION SCHEDULES, AND ORIGINAL PERFORMANCE TIME, ORIGINAL COSTS, METHODS, MEANS, SEQUENCES AND PROCEDURES OF CONSTRUCTION OF ALL OTHER CONTRACT CHANGE ORDERS ARE NOT PART OF THIS CHANGE ORDER. ALL RIGHTS ARE RESERVED AND NOT ACCORDED OR SATISFIED REGARDING SUCH CHANGES AND EFFECTS.

ARTICLE III

THE AMOUNT (S) SET FORTH IN THIS CHANGE ORDER ARE FULL REIMBURSEMENT FOR THE DIRECT COST OF ALL LABOR, MATERIAL AND EQUIPMENT NECESSARY TO PERFORM THE WORK DESCRIBED IN THIS PRE-CHANGE ORDER SUMMARY ATTACHED. ALL RIGHTS ARE RESERVED AND ARE NOT ACCORDED OR SATISFIED BY THIS CHANGE ORDER REGARDING ADDITIONAL TIME REQUIRED OR ADDITIONAL COST INCURRED TO PERFORM ANY AND ALL OTHER WORK OF THIS CONTRACT (INCLUDING OTHER CHANGES ORDERS), CAUSED BY THIS CHANGE ORDER

8055 BROADVIEW ROAD * BROADVIEW HEIGHTS, OHIO 44147 * 440-838-1011 / FAX 440-838-1806

HERCULES
FIRE PROTECTION & PLUMBING
A LIMITED LIABILITY COMPANY

Contract Change Request

Change Order #CO-0119

September 04, 2020

Attn: Nick Hurst
Seitz Builders Inc.
8055 Broadview Rd
Broadview Heights, OH 44147

Re: Clearview School District
Bus Garage
4700 Broadway Ave
Lorain, OH 44052

Dear To Whom It May Concern,

Pursuant to your authorization and/or request, changes and additions in the work specified in the above numbered contract will be made upon the premises at: Clearview School District Bus Garage.

It is agreed that such changes and additions will constitute an ***addition*** to the contract in the amount of:

One Thousand One Hundred & Fifty Dollars +($1,150.00)

The aforementioned sum will be added to the original value of the contract. All work performed hereunder shall be in accordance with the terms and conditions of the above numbered contract (original).

This change order request is for the inclusion of the deduction(s) and alteration(s) within the Clearview School District Bus Garage.

- **Price is for the additional labor and materials to retrofit the existing drinking fountain with a sensor operated bottle filling station.**

Performance of the work described above shall not begin until receipt of written acceptance is received. Acceptance of such work shall be deemed Change Order #CO-0119.

Sincerely,

David J. Ritchey

To accept this proposal, please sign, date and email to sales@herculesfire.com.

Signed: _____ Printed Name: _____

Title: _____ Date of Acceptance: _____

CHANGE ORDER PRICING REVIEW

Date: 4-Sep-2020

Project No.: 20005 District: County: Cuyahoga

Project: Clearview Bus Garage

Contractor: Hercules Fire Protection & Plbg., LLC

Constr. Mgr.: Seitz Builders

Architect:

Description: Price is for the additional labor to install the proposed trench drain in leiu of the formed concrete trench drains.

					TOTALS
A. Plumber: (straight time only)					
worker classification	(Plumber)	5 hours	x rate =	$35.78	$178.90
worker classification	Foreman (7.5% labor)	0.375 hours	x rate =	$38.46	$14.42
B. FRINGES: (on labor only, may include FICA etc.)					
Health & Welfare		5.375 hours	x rate =	$9.60	$51.60
Pension		5.375 hours	x rate =	$10.68	$57.41
Vacation Fund		5.375 hours	x rate =	$0.00	$0.00
Taxes (FICA, SUTA)		5.375 hours	x rate =	$3.31	$17.79
Group Fringes (shown in table at right)		5.375 hours	x rate =	$5.30	$28.49
C. EQUIPMENT RENTALS (Heavy/specialized equipment)		0 day	x rate =	$115.00	$0.00
D. OWNED EQUIPMENT (Heavy/specialized equipment re: AED Blue Book)		0 day	x rate =	$75.00	$0.00
E. FIRE SPRINKLER DESGIN		0 hours	x rate =	$100.00	$0.00

Additional Fringes				
Type	hours	x	rate
App. Training	5.375	x	$1.23
Annuity	5.375	x	$3.77
Other	5.375	x	$0.30
Total	5.375	x	$5.30

Subtotal (A,B,C,D,E): $348.61

F. OVERHEAD: @ 10 % (on items A,B,C,D & E =< 10%) $34.86

G. MATERIALS (Contractor's actual cost only, this applies to subcontractors also) ..... 1 quantity x $661.99 unit cost = $661.99

Subtotal (A,B,C,D,E,F,G): $1,045.46

H. PROFIT: @ 10% (on items A,B,C,D,E,F & G) $104.55
(profit on 'G' requires addendum to contact)

Subtotal (A thru H): $1,150.00

I. SUBCONTRACTOR (reasonable cost for all labor & material) 0 $0.00

J. SUBCONTRACTOR MARKUP (markup is = or < 10%) 5% $0.00

Subtotal (I and J): $0.00

TOTAL COST (A thru H) + (I and J): $1,150.00

K. MISCELLANEOUS ITEMS (allowable @ cost only)

1. Bond extension Total Cost x 0.00% $0.00
2. *Premium portion of approved OT wages $0.00
3. Fees for permits, licenses, etc. $0.00
4. *Lodging and travel due to special circumstances $0.00
   (not to exceed state travel guidelines)

TOTAL COST (A thru H) + (I and J) + (K): $1,150.00

*Approved Items = must be approved by both owners, CM and A/E prior to work being performed

AIA® Document G709™ – 2018

Proposal Request

PROJECT: *(name and address)* Clearview Bus Garage	**CONTRACT INFORMATION:** Contract For: General Construction Date: February 12, 2020	Architect's Project Number: 2018200.13 Proposal Request Number: 008 Proposal Request Date: 9-1-20
OWNER: *(name and address)* Clearview Local School District 4700 Broadway Avenue Lorain, Ohio 44052	**ARCHITECT:** *(name and address)* GPD Group 520 South Main Street Suite 2531 Akron, Ohio 44311	**CONTRACTOR:** *(name and address)* Seitz Builders, Inc. 8055 Broadway Road Broadway Heights, Ohio 44147

The Owner requests an itemized proposal for changes to the Contract Sum and Contract Time for proposed modifications to the Contract Documents described herein. The Contractor shall submit this proposal within fourteen (14) days or notify the Architect in writing of the anticipated date of submission.
(Insert a detailed description of the proposed modifications to the Contract Documents and, if applicable, attach or reference specific exhibits.)

Provide "Elkay" Model #EZWSRK bottle fill retrofit. Install on hi drinking fountain in the garage area

Attachment: Elkay Installation & Use Manual

THIS IS NOT A CHANGE ORDER, A CONSTRUCTION CHANGE DIRECTIVE, OR A DIRECTION TO PROCEED WITH THE WORK DESCRIBED IN THE PROPOSED MODIFICATIONS.

REQUESTED BY THE ARCHITECT:

Russell Gutheart, Project Architect
PRINTED NAME AND TITLE

ELKAY®

INSTALLATION & USE MANUAL

EZWSRK - ezH2O® RETRO-FIT BOTTLE FILLING UNIT
LZWSRK - ezH2O® RETRO-FIT BOTTLE FILLING UNIT

IMPORTANT

THIS IS AN INDOOR APPLICATION ONLY.
ALL SERVICE TO BE PERFORMED BY AN AUTHORIZED SERVICE PERSON.

TOOLS REQUIRED
BUT NOT PROVIDED:

SAFETY GLASSES
GLOVES
3/4" WRENCH OR CRESCENT WRENCH
5/16" NUT DRIVER
UTILITY KNIFE
TAPE MEASURE
PENCIL
CENTER PUNCH
1/2" SOCKET & RATCHET WRENCH
5/32" ALLEN WRENCH
7/64" ALLEN WRENCH

IMPORTANT! INSTALLER PLEASE NOTE.

THE GROUNDING OF ELECTRICAL EQUIPMENT SUCH AS TELEPHONE, COMPUTERS, ETC. TO WATER LINES IS A COMMON PROCEDURE. THIS GROUNDING MAY BE IN THE BUILDING OR MAY OCCUR AWAY FROM THE BUILDING. THIS GROUNDING CAN CAUSE ELECTRICAL FEEDBACK INTO A FOUNTAIN, CREATING AN ELECTROLYSIS WHICH CAUSES A METALLIC TASTE OR AN INCREASE IN THE METAL CONTENT OF THE WATER. THIS CONDITION IS AVOIDABLE BY USING THE PROPER MATERIALS AS INDICATED. ANY DRAIN FITTINGS PROVIDED BY THE INSTALLER SHOULD BE MADE OF PLASTIC TO ELECTRICALLY ISOLATE THE FOUNTAIN FROM THE BUILDING PLUMBING SYSTEM. WE SUGGEST THAT THE BOTTLE FILLING STATION AND WATER COOLER BE PROTECTED BY A GROUND FAULT CIRCUIT INTERRUPTER (GFCI).

INSTALLER

EZWSR / LZWSR Bottle Fillers are among the easiest to install on the market today. To insure you install these models easily and correctly, PLEASE READ THESE SIMPLE INSTRUCTIONS BEFORE STARTING THE INSTALLATION. CHECK YOUR INSTALLATION FOR COMPLIANCE WITH PLUMBING, ELECTRICAL, AND OTHER APPLICABLE CODES. After installation, leave these instructions with the Cooler for future reference.

1000004729 (Rev. B - 07/19)

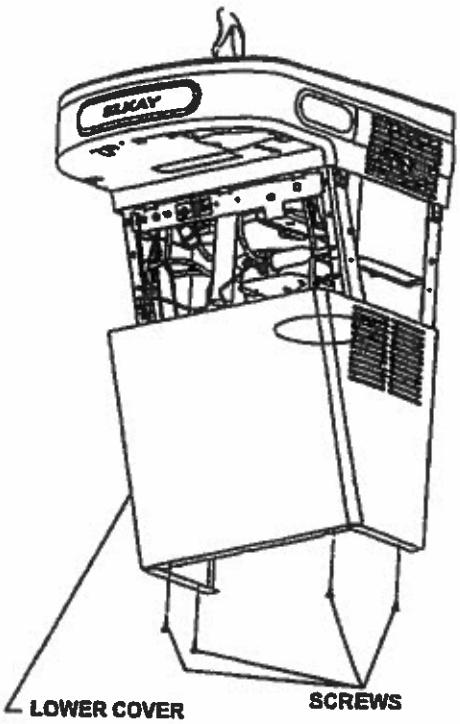

Fig. 1

WATER COOLER PREPARATION

1. Remove lower front panel of watercooler by removing the four (4) screws from the bottom of cooler. (See Fig. 1) NOTE: For Bi-Level Models the Bottle Filling Unit can be mounted to the higher or lower unit. Both lower front panels and basin assemblies will need to be removed.

1a. For units with model no's. ending with 1, 1A, 2 or 3 these units will need to be removed from the wall in order to remove the basin assembly(s).

2. Power OFF circuit that the water cooler is connected to by switching the circuit breaker to the "OFF" position or by removing the fuse to the circuit. Remove the water cooler plug from the outlet and shut off water supply.
3. Remove Basin Assembly by loosening four (4) screws two on each side of cooler as shown in Fig. 8. Disconnect water line "A" from bubbler at the evaporator tank (See Fig. 6). NOTE: When disconnecting water lines use a container to catch any water running out of the lines. Disconnect basin assembly from drain trap. Lift basin assembly straight up to remove, and disconnect two wires from push bar switches. (Note: This will allow easier assembly of water filter to unit and pressurization of the unit.)
4. For units referenced in step "1a". Remove Basin Assembly by loosening four (4) screws two on each side of cooler as shown in Fig. 8. Remove 2 screws from top back of unit to remove the "L" bracket. Remove 1 screw from left side of cross brace in front of unit that retains the drain support. Disconnect water line "A" from regulator at the evaporator tank (See Fig. 6B). NOTE: When disconnecting water lines use a container to catch any water running out of the lines. Disconnect basin assembly from drain trap. Lift basin assembly straight up to remove, and disconnect two wires from push bar switches. (Note: This will allow easier assembly of water filter to unit and pressurization of the unit.)

EWF3000 WATERSENTRY PLUS FILTER INSTALLATION

NOTICE: Do not use with water that is microbiologically unsafe or of unknown quality without adequate disinfection before or after the system.

1. These filter kits must be installed in compliance with all state and local laws and regulations governing the installation and use of this product. Maximum inlet water temperature 100°F (38°C).
2. See filter instructions for filter assembly. Insert 3/8" elbow fitting into the inlet side of filter head, insert 1/4" poly tube or 1/4" x 90° elbow into outlet side of filter head prior to mounting the filter head assembly into the cooler.
3. Mount filter head as shown in Fig. 9, using the filter mounting bracket and screws supplied. For Bi-Level units the filter must be mounted to the L.H. non-refrigerated unit at the same location as shown in Fig. 9.

PRESSURIZATION OF WATER SYSTEM

NOTE: This procedure MUST be performed on ALL SINGLE EZ WATER COOLERS or the bottle filling unit WILL NOT perform properly!

1. Remove water inlet (B) and outlet (C) from solenoid valve (See Fig. 6 or 6B). NOTE: When disconnecting water lines use a container to catch any water running out of the lines.
2. CAUTION: If supply pressure will ever exceed 100 psi, install a pressure regulator to limit the inlet pressure to the filter to 100 psi or below. DO NOT ATTACH HOT WATER LINE TO FILTER. To make connections on the filter head, loosen locknut. Push the tube end past both o-rings to a positive stop in the filter head recess - approx. 1", locknut may have to be backed out a little more. Screw the locknut hand tight to seal (See Fig. 10). Ends of tubing must be cut square and free of burrs and sharp ends that could cut or nick the o-rings.
3. Connect the outlet of the filter to the inlet of the evaporator using the 1/4" O.D. poly tubing and 1/4" union supplied (See Fig. 7 or 7B).
4. Cut a 12" long piece of poly tube (be sure to insulate poly tube with supplied insulation tubing) and insert one end into the outlet side of the evaporator "D" (See Fig. 7 or 7B), connect Tee to other end of tube.
5. Cut a 12" long piece of poly tube (be sure to insulate poly tube with supplied insulation tubing) and insert into the Tee and the other end into the inlet side of the solenoid valve "E" (See fig. 7 or 7B).

Bi-Level MODIFICATION OF WATER SYSTEM

NOTE: Bi-Level water systems are already plumbed for pressurization.

STANDARD Bi-Level MODELS

Follow instruction 2 thru 4 under "Pressurization of water system" to attach filter to water system. The non-refrigerated side must be removed from the wall in order to remove the basin assy. and install the filter head assy.

1. Remove the Bi-Level Cover Plate from the right hand side of the non-refrigerated unit in order to access the rear Basin Assy. screw.
2. Cut poly tube "H" between the existing tee and the solenoid valve of the L.H. unit (See Fig. 6A or 6C).
3. Insert supplied Tee in water line "H" where it was just cut (See Fig. 7A or 7C).

Bi-Level Versatile MODELS

Follow instruction 2 thru 4 under "Pressurization of water system" to attach filter to water system. The non refrigerated side must be removed from the wall in order to remove the basin assy. and install the filter head assy.

1. Remove the Bi-Level Cover Plate from the left hand side of the refrigerated unit in order to access the rear Basin Assy. screw (See Fig 6).
2. Cut poly tube "H" approximately 3" from the left side of the existing tee.
3. Insert supplied tee in water line "H" where it was just cut.

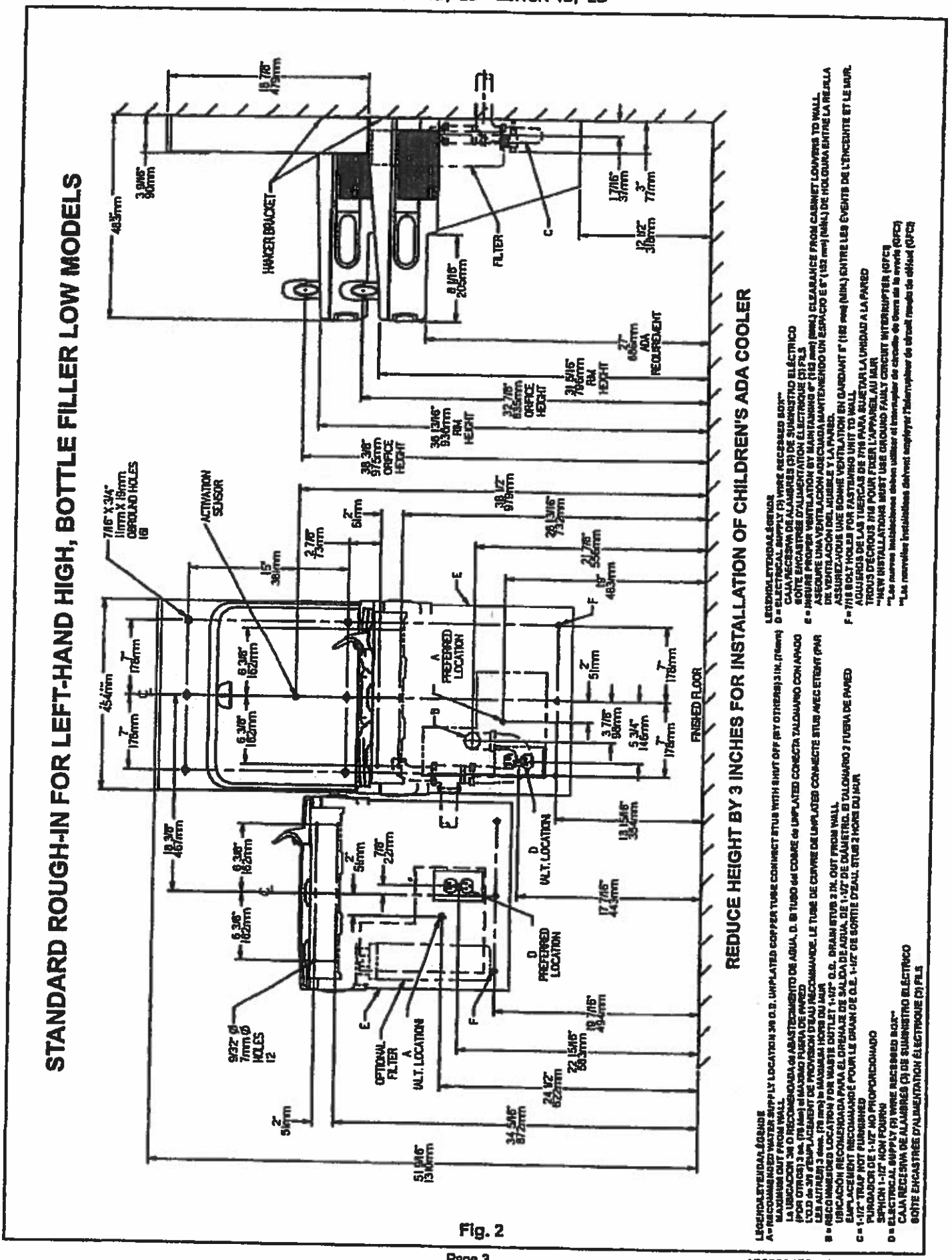
STANDARD ROUGH-IN FOR LEFT-HAND HIGH, BOTTLE FILLER LOW MODELS
REDUCE HEIGHT BY 3 INCHES FOR INSTALLATION OF CHILDREN'S ADA COOLER
HANGER BRACKET
FILTER
C
ACTIVATION SENSOR
7/16" X 3/4" 11mm X 19mm OBROUND HOLES 18
A PREFERRED LOCATION
B
D PREFERRED LOCATION
D ALT. LOCATION
OPTIONAL FILTER
A ALT. LOCATION
9/32" ø 7mm ø HOLES 12
FINISHED FLOOR
E
F
ADA REQUIREMENT
RM HEIGHT
OFFICE HEIGHT
LEGENDA/LEYENDA/LÉGENDE
A = RECOMMENDED WATER SUPPLY LOCATION 3/8 O.D. UNPLATED COPPER TUBE CONNECT STUB WITH SHUT OFF (BY OTHERS) 3 IN. (76mm) MAXIMUM OUT FROM WALL
LA UBICACION 3/8 O RECOMENDADA de ABASTECIMIENTO DE AGUA, D. B TUBO de COBRE de UNPLATED CONECTA TALONANIO CON APAGO (POR OTROS) 3 IN. (76 mm) el MAXIMO FUERA DE PARED
L'O.D. de 3/8 d'EMPLACEMENT DE PROVISION D'EAU RECOMMANDE. LE TUBE DE CUIVRE DE UNPLATED CONNECTE STUB AVEC ETEINT (PAR LES AUTRES) 3 dans. (76 mm) le MAXIMUM HORS DU MUR
B = RECOMMENDED LOCATION FOR WASTE OUTLET 1-1/2" O.D. DRAIN STUB 2 IN. OUT FROM WALL
UBICACION RECOMENDADA PARA EL DREHAJE DE SALIDA DE AGUA, DE 1-1/2" DE DÁMETRO, B TALONANIO 2 FUERA DE PARED
EMPLACEMENT RECOMMANDÉ POUR LE DRAIN DE O.D. 1-1/2" DE SORTIE D'EAU, STUB 2 HORS DU MUR
C = 1-1/2" TRAP NOT FURNISHED
PURGADOR DE 1-1/2" NO PROPORCIONADO
SIPHON 1-1/2" NON FOURNI
D = ELECTRICAL SUPPLY (1) WIRE RECESSED BOX**
CAJA RECESIVA DE ALAMBRES (1) DE SUMINISTRO ELÉCTRICO
BOÎTE ENCASTRÉE D'ALIMENTATION ÉLECTRIQUE (1) FILS
LEGENDA/LEYENDA/LÉGENDE
D = ELECTRICAL SUPPLY (1) WIRE RECESSED BOX**
CAJA RECESIVA DE ALAMBRES (1) DE SUMINISTRO ELÉCTRICO
BOÎTE ENCASTRÉE D'ALIMENTATION ÉLECTRIQUE (1) FILS
E = INSURE PROPER VENTILATION BY MAINTAINING 6" (152 mm) (MIN.) CLEARANCE FROM CABINET LOUVERS TO WALL
ASEGURE UNA VENTILACION ADECUADA MANTENIENDO UN ESPACIO DE 6" (152 mm) (MIN.) DE HOLGURA ENTRE LA REJILLA DE VENTILACION DEL MUEBLE Y LA PARED.
ASSURE-VOUS UNE BONNE VENTILATION EN GARDANT 6" (152 mm) (MIN.) ENTRE LES EVENTS DE L'ENCEINTE ET LE MUR.
F = 7/16 BOLT HOLES FOR FASTENING UNIT TO WALL
AGUJEROS DE LAS TUERCAS DE 7/16 PARA SUJETAR LA UNIDAD A LA PARED
TROUS D'ÉCROUS 7/16 POUR FIXER L'APPAREL AU MUR
**NEW INSTALLATIONS MUST USE GROUND FAULT CIRCUIT INTERRUPTER (GFCI)
**Las nuevas instalaciones deben utilizar el interruptor de circuito de falla de tierra (GFCI)
**Les nouvelles installations doivent employer l'interrupteur de circuit mode de défaut (GFCI)

Fig. 2

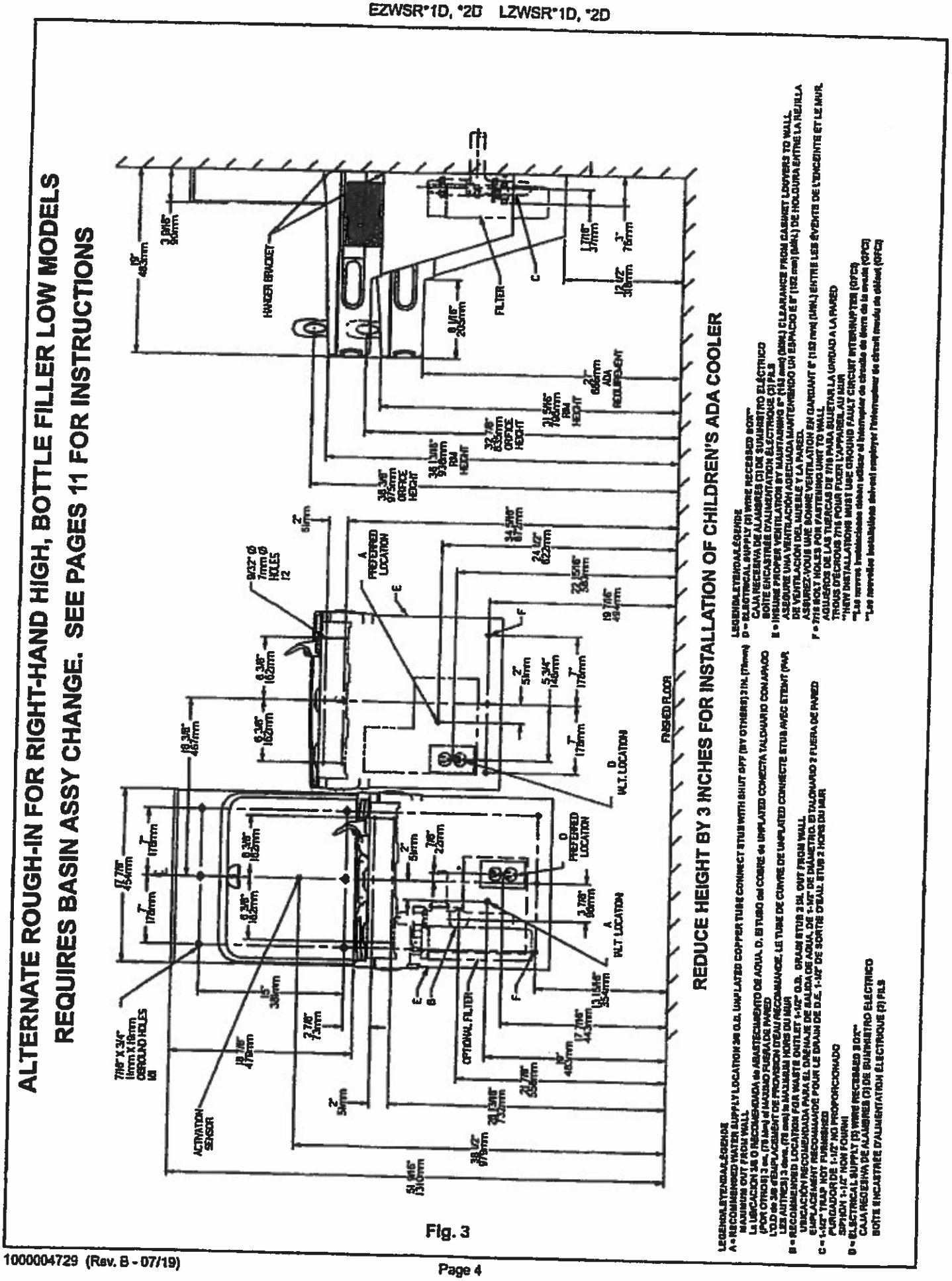
ALTERNATE ROUGH-IN FOR RIGHT-HAND HIGH, BOTTLE FILLER LOW MODELS
REQUIRES BASIN ASSY CHANGE. SEE PAGES 11 FOR INSTRUCTIONS
REDUCE HEIGHT BY 3 INCHES FOR INSTALLATION OF CHILDREN'S ADA COOLER
HANGER BRACKET
FILTER
FINISHED FLOOR
PREFERRED LOCATION
W.T. LOCATION
ACTIVATION SENSOR
OPTIONAL FILTER
LEGENDA LETRA DA LÉGENDE
A = RECOMMENDED WATER SUPPLY LOCATION 3/8 O.D. UNPLATED COPPER TUBE CONNECT STUB WITH SHUT OFF (BY OTHERS) 3 IN. (76mm) MAXIMUM OUT FROM WALL
LA UBICACIÓN 3/8 O RECOMENDADA de ABASTECIMIENTO DE AGUA. O. BTUBO del COBRE de UNPLATED CONECTA TALOHARIO CON APAGO (POR OTROS) 3 pu. (76 mm) el MAXIMO FUERA DE PARED
L'O.D de 3/8 d'EMPLACEMENT DE PROVISION D'EAU RECOMMANDE. LE TUBE DE CUIVRE DE UNPLATED CONNECTE STUB AVEC ETEINT (PAR LES AUTRES) 3 po. (76 mm) le MAXIMUM HORS DU MUR
B = RECOMMENDED LOCATION FOR WASTE OUTLET 1-1/2" O.D. DRAIN STUB 3 IN. OUT FROM WALL
UBICACIÓN RECOMENDADA PARA EL DRENAJE DE SALIDA DE AGUA DE 1-1/2" DE DIÁMETRO. ET TALOHARIO 3 FUERA DE PARED
EMPLACEMENT RECOMMANDÉ POUR LE DRAIN DE D.E. 1-1/2" DE SORTIE D'EAU. ETUB 3 HORS DU MUR
C = 1-1/2" TRAP NOT FURNISHED
PURGADOR DE 1-1/2" NO PROPORCIONADO
SIPHON 1-1/2" NON FOURNI
D = ELECTRICAL SUPPLY (3) WIRE RECESSED BOX*
CAJA RECESIVA DE ALAMBRES (3) DE SUMINISTRO ELÉCTRICO
BOITE ENCASTRÉE D'ALIMENTATION ÉLECTRIQUE (3) FILS
LEGENDA LETRA DA LÉGENDE
D = ELECTRICAL SUPPLY (3) WIRE RECESSED BOX*
CAJA RECESIVA DE ALAMBRES (3) DE SUMINISTRO ELÉCTRICO
BOITE ENCASTRÉE D'ALIMENTATION ÉLECTRIQUE (3) FILS
E = INSURE PROPER VENTILATION BY MAINTAINING 6" (152 mm) (MIN.) CLEARANCE FROM CABINET LOUVERS TO WALL
ASEGURE UNA VENTILACIÓN ADECUADA MANTENIENDO UN ESPACIO DE 6" (152 mm) (MIN.) DE HOLGURA ENTRE LA REJILLA DE VENTILACIÓN DEL MUEBLE Y LA PARED.
ASSUREZ-VOUS UNE BONNE VENTILATION EN GARDANT 6" (152 mm) (MIN.) ENTRE LES ÉVENTS DE L'ENCEINTE ET LE MUR.
F = 7/16 HOLT HOLES FOR FASTENING UNIT TO WALL
AGUJEROS DE LAS TUERCAS DE 7/16 PARA SUJETAR LA UNIDAD A LA PARED
TROUS D'ECROUS 7/16 POUR FIXER L'APPAREIL AU MUR
*THIS INSTALLATIONS MUST USE GROUND FAULT CIRCUIT INTERRUPTER (GFCI)
*Las nuevas instalaciones deben utilizar el interruptor de circuito de falla de tierra (GFCI)
*Les nouvelles installations doivent employer l'interrupteur de circuit mauvais de détérioration (GFCI)

Fig. 3

ALTERNATE ROUGH-IN FOR RIGHT-HAND HIGH, BOTTLE FILLER HIGH MODELS

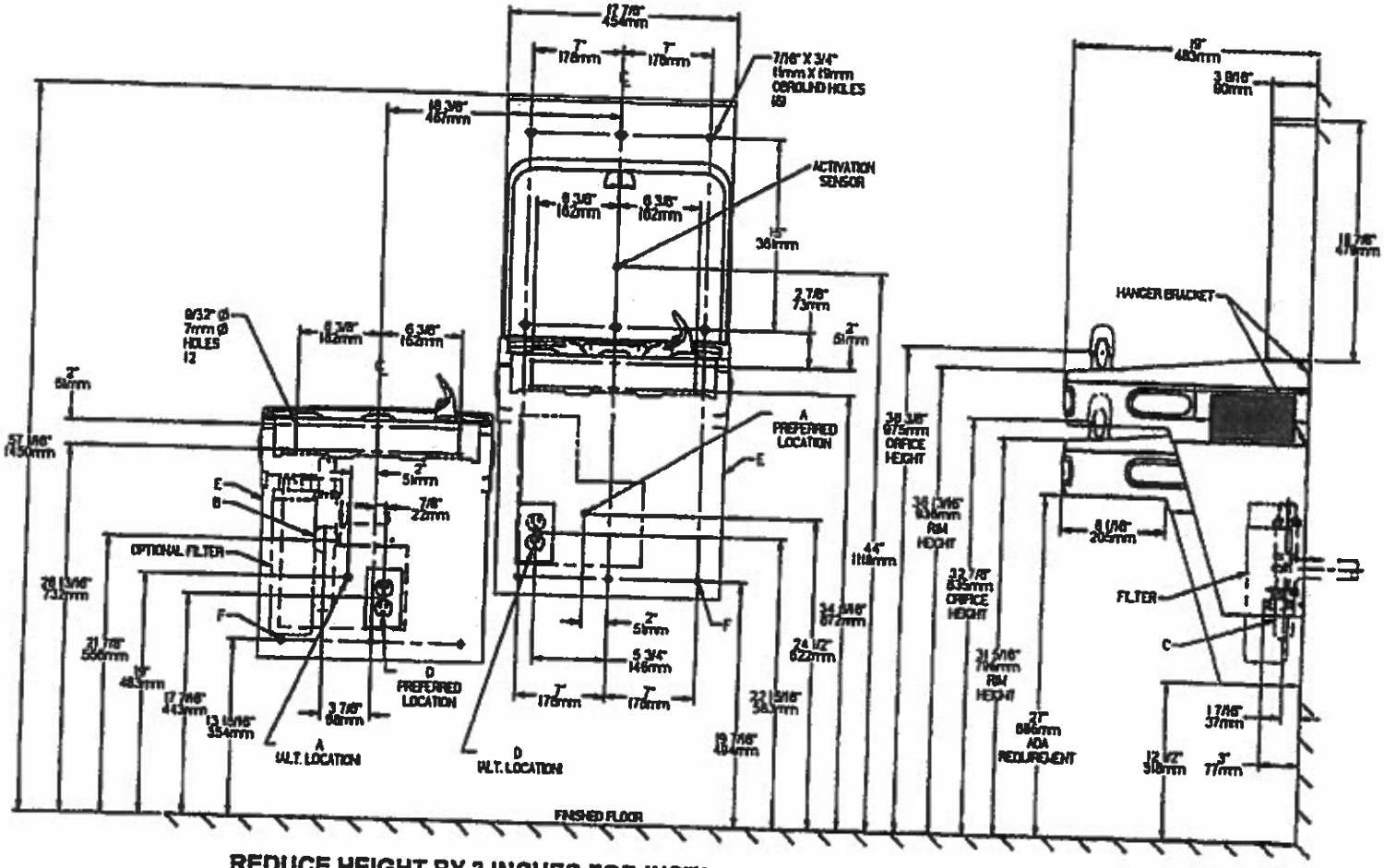

REDUCE HEIGHT BY 3 INCHES FOR INSTALLATION OF CHILDREN'S ADA COOLER

LEGEND/LEYENDA/LÉGENDE

A = RECOMMENDED WATER SUPPLY LOCATION 3/8 O.D. UNPLATED COPPER TUBE CONNECT STUB WITH SHUT OFF (BY OTHERS) 3 IN. (76mm) MAXIMUM OUT FROM WALL
La UBICACION 3/8 O RECOMENDADA de ABASTECIMIENTO DE AGUA. D. El TUBO del COBRE de UNPLATED CONECTA TALONARIO CON APAGO (POR OTROS) 3 en. (76 Mm) el MAXIMO FUERA DE PARED
L'O.D de 3/8 d'EMPLACEMENT DE PROVISION D'EAU RECOMMANDE. LE TUBE DE CUIVRE de UNPLATED CONNECTE STUB AVEC ETEINT (PAR LES AUTRES) 3 dans. (76 mm) le MAXIMUM HORS DU MUR

B = RECOMMENDED LOCATION FOR WASTE OUTLET 1-1/2" O.D. DRAIN STUB 2 IN. OUT FROM WALL
UBICACIÓN RECOMENDADA PARA EL DRENAJE DE SALIDA DE AGUA, DE 1-1/2" DE DIÁMETRO, El TALONARIO 2 FUERA DE PARED
EMPLACEMENT RECOMMANDE POUR LE DRAIN DE D.E. 1-1/2" DE SORTIE D'EAU. STUB 2 HORS DU MUR

C = 1-1/2" TRAP NOT FURNISHED
PURGADOR DE 1-1/2" NO PROPORCIONADO
SIPHON 1-1/2" NON FOURNI

D = ELECTRICAL SUPPLY (3) WIRE RECESSED BOX**
CAJA RECESIVA DE ALAMBRES (3) DE SUMINISTRO ELÉCTRICO
BOÎTE ENCASTRÉE D'ALIMENTATION ÉLECTRIQUE (3) FILS

LEGEND/LEYENDA/LÉGENDE

D = ELECTRICAL SUPPLY (3) WIRE RECESSED BOX**
CAJA RECESIVA DE ALAMBRES (3) DE SUMINISTRO ELÉCTRICO
BOÎTE ENCASTRÉE D'ALIMENTATION ÉLECTRIQUE (3) FILS

E = INSURE PROPER VENTILATION BY MAINTAINING 6" (152 mm) (MIN.) CLEARANCE FROM CABINET LOUVERS TO WALL.
ASEGURE UNA VENTILACIÓN ADECUADA MANTENIENDO UN ESPACIO E 6" (152 mm) (MIN.) DE HOLGURA ENTRE LA REJILLA DE VENTILACIÓN DEL MUEBLE Y LA PARED.
ASSUREZ-VOUS UNE BONNE VENTILATION EN GARDANT 6" (152 mm) (MIN.) ENTRE LES EVENTS DE L'ENCEINTE ET LE MUR.

F = 7/16 BOLT HOLES FOR FASTENING UNIT TO WALL.
AGUJEROS DE LAS TUERCAS DE 7/16 PARA SUJETAR LA UNIDAD A LA PARED
TROUS D'ÉCROUS 7/16 POUR FIXER L'APPAREIL AU MUR

**NEW INSTALLATIONS MUST USE GROUND FAULT CIRCUIT INTERRUPTER (GFCI)
**Las nuevas instalaciones deben utilizar el interruptor de circuito de tierra de la avería (GFCI)
**Les nouvelles installations doivent employer l'interrupteur de circuit mis à la défaut (GFCI)

Fig. 4

ALTERNATE ROUGH-IN FOR LEFT-HAND HIGH, BOTTLE FILLER HIGH MODELS REQUIRES BASIN ASSY CHANGE. SEE PAGES 11 FOR INSTRUCTIONS

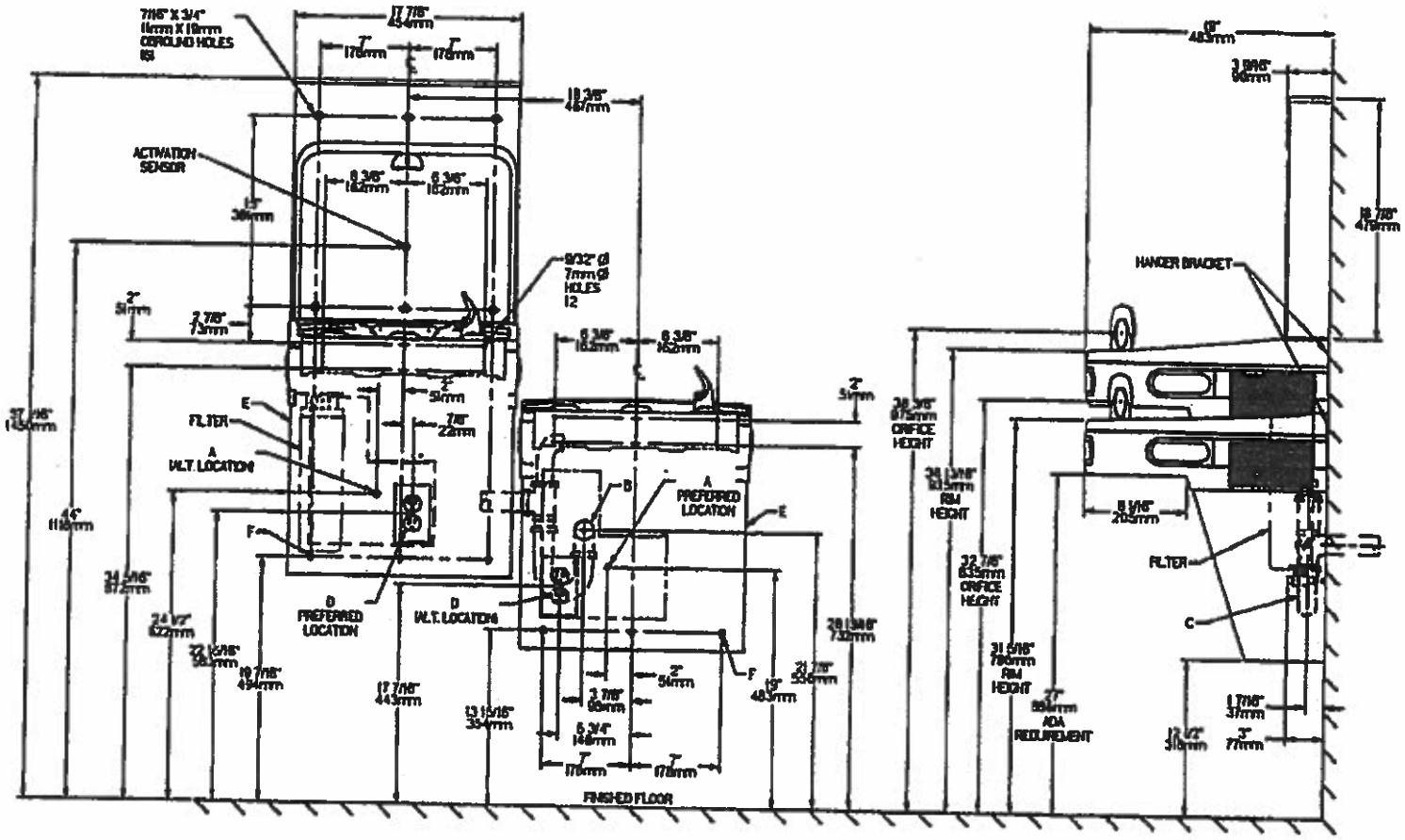

REDUCE HEIGHT BY 3 INCHES FOR INSTALLATION OF CHILDREN'S ADA COOLER

LEGENDE/LEYENDA/LÉGENDE

A = RECOMMENDED WATER SUPPLY LOCATION 3/8 O.D. UNPLATED COPPER TUBE CONNECT STUB WITH SHUT OFF (BY OTHERS) 3 IN. (76mm) MAXIMUM OUT FROM WALL.
La UBICACION 3/8 O RECOMENDADA de ABASTECIMIENTO DE AGUA. D. El TUBO del COBRE de UNPLATED CONECTA TALONARIO CON APAGO (POR OTROS) 3 en. (76 Mm) el MAXIMO FUERA DE PARED
L'O.D de 3/8 d'EMPLACEMENT DE PROVISION D'EAU RECOMMANDE. LE TUBE DE CUIVRE DE UNPLATED CONNECTE STUB AVEC ETEINT (PAR LES AUTRES) 3 dans. (76 mm) le MAXIMUM HORS DU MUR

B = RECOMMENDED LOCATION FOR WASTE OUTLET 1-1/2" O.D. DRAIN STUB 2 IN. OUT FROM WALL
UBICACIÓN RECOMENDADA PARA EL DRENAJE DE SALIDA DE AGUA, DE 1-1/2" DE DIÁMETRO. El TALONARIO 2 FUERA DE PARED
EMPLACEMENT RECOMMANDÉ POUR LE DRAIN DE D.E. 1-1/2" DE SORTIE D'EAU. STUB 2 HORS DU MUR

C = 1-1/2" TRAP NOT FURNISHED
PURGADOR DE 1-1/2" NO PROPORCIONADO
SIPHON 1-1/2" NON FOURNI

D = ELECTRICAL SUPPLY (3) WIRE RECESSED BOX**
CAJA RECESIVA DE ALAMBRES (3) DE SUMINISTRO ELÉCTRICO
BOÎTE ENCASTRÉE D'ALIMENTATION ÉLECTRIQUE (3) FILS

LEGENDE/LEYENDA/LÉGENDE

D = ELECTRICAL SUPPLY (3) WIRE RECESSED BOX**
CAJA RECESIVA DE ALAMBRES (3) DE SUMINISTRO ELÉCTRICO
BOÎTE ENCASTRÉE D'ALIMENTATION ÉLECTRIQUE (3) FILS

E = DESIRE PROPER VENTILATION BY MAINTAINING 6" (152 mm) (MIN.) CLEARANCE FROM CABINET LOUVERS TO WALL.
ASEGURE UNA VENTILACIÓN ADECUADA MANTENIENDO UN ESPACIO E 6" (152 mm) (MIN.) DE HOLGURA ENTRE LA REJILLA DE VENTILACIÓN DEL MUEBLE Y LA PARED.
ASSUREZ-VOUS UNE BONNE VENTILATION EN GARDANT 6" (152 mm) (MIN.) ENTRE LES EVENTS DE L'ENCEINTE ET LE MUR.

F = 7/16 BOLT HOLES FOR FASTENING UNIT TO WALL.
AGUJEROS DE LAS TUERCAS DE 7/16 PARA SUJETAR LA UNIDAD A LA PARED
TROUS D'ÉCROUS 7/16 POUR FIXER L'APPAREIL AU MUR

**NEW INSTALLATIONS MUST USE GROUND FAULT CIRCUIT INTERRUPTER (GFCI)
**Las nuevas instalaciones deben utilizar el interruptor de circuito de tierra de la avería (GFCI)
**Les nouvelles installations doivent employer l'interrupteur de circuit mauvi de défaut (GFCI)

Fig. 5

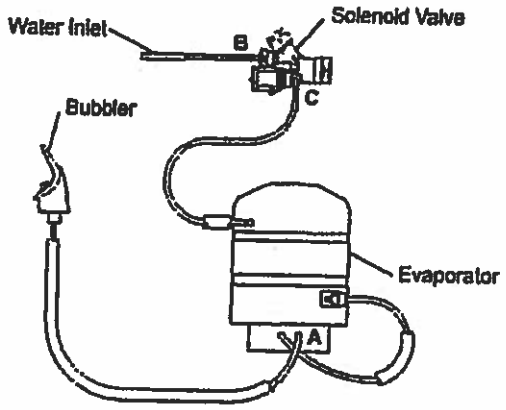

EZ Non-Pressurized Plumbing Diagram
Fig. 6

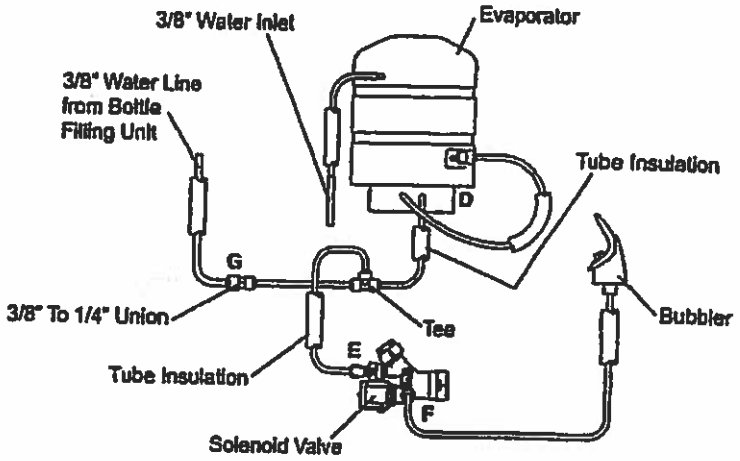

EZ Plumbing Diagram after Pressurization Modifications
Fig. 7

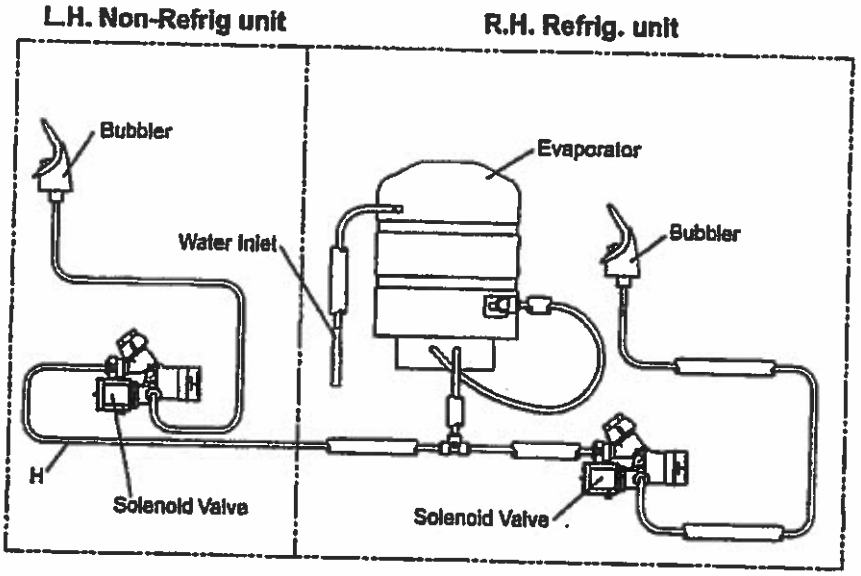

Standard EZ Bi-Level Pressurized Plumbing Diagram
Fig. 6A

EZ Bi-Level Plumbing Diagram after Bottle Filler Water Line Addition
Fig. 7A

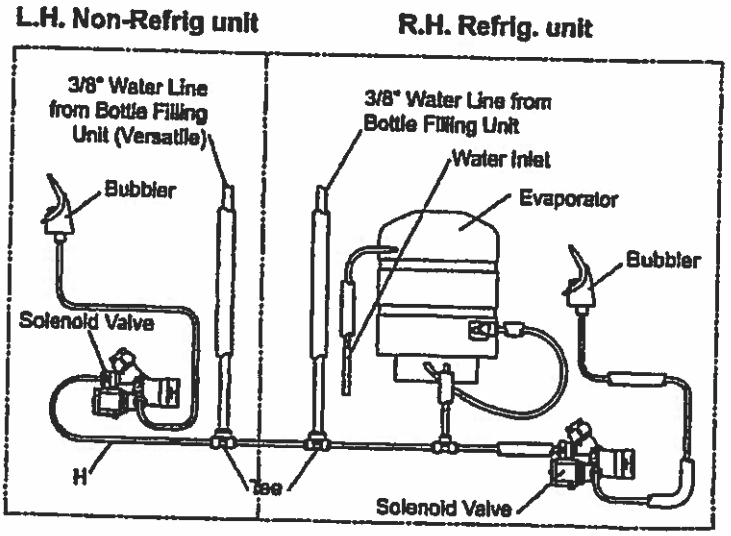

Plumbing Diagrams for EZ Coolers w/model no's ending with 1, 1A, 2, & 3

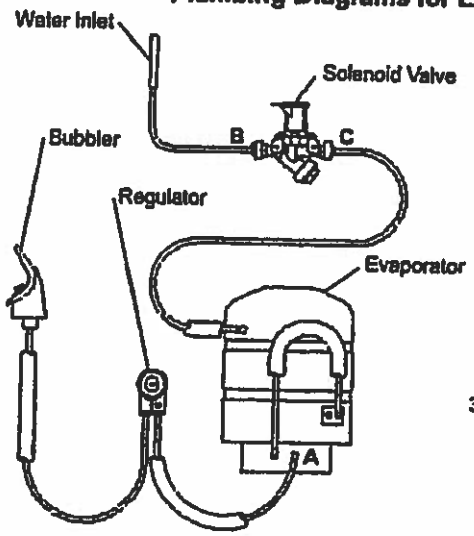

EZ Non-Pressurized Plumbing Diagram
Fig. 6B

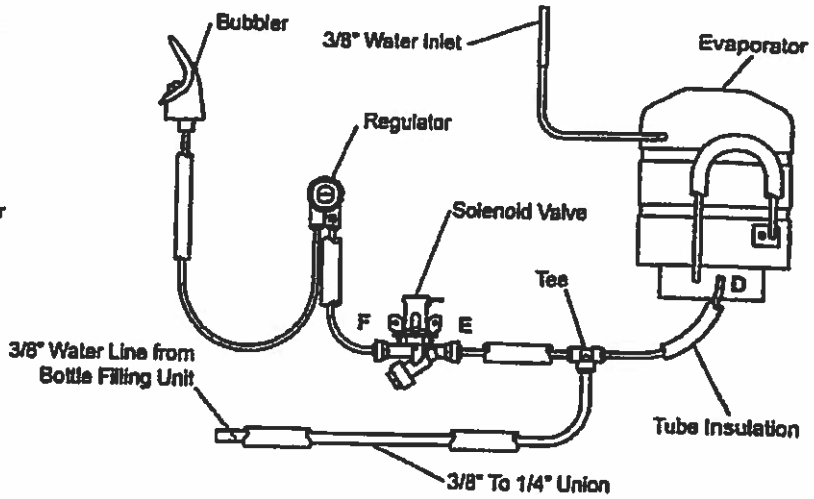

EZ Plumbing Diagram after Pressurization Modifications
Fig. 7B

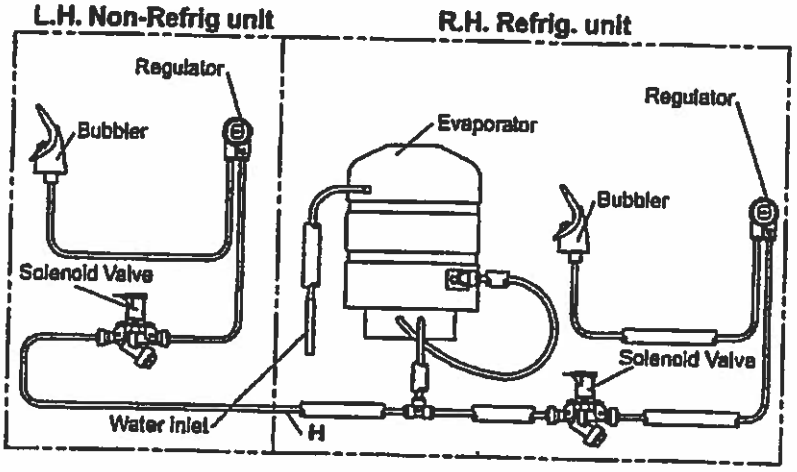

Standard EZ Bi-Level Pressurized Plumbing Diagram
Fig. 6C

EZ Bi-Level Plumbing Diagram after Bottle Filler Water Line Addition
Fig. 7C

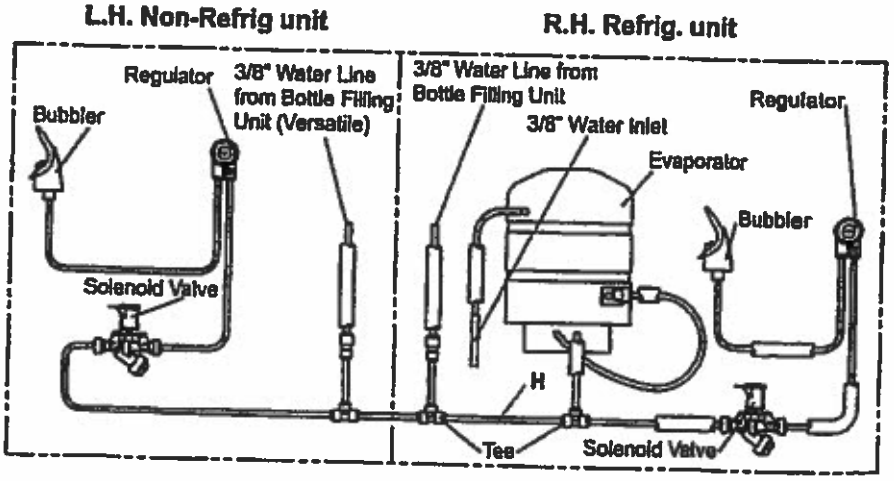

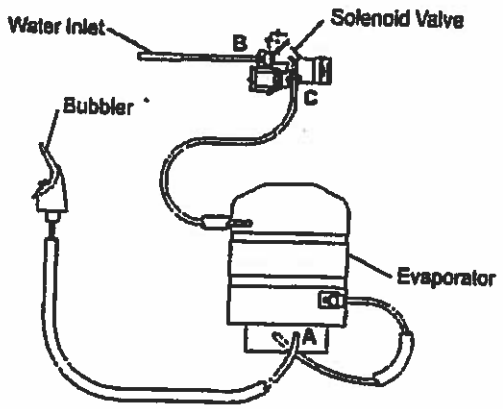

EZ Non-Pressurized Plumbing Diagram
Fig. 6D

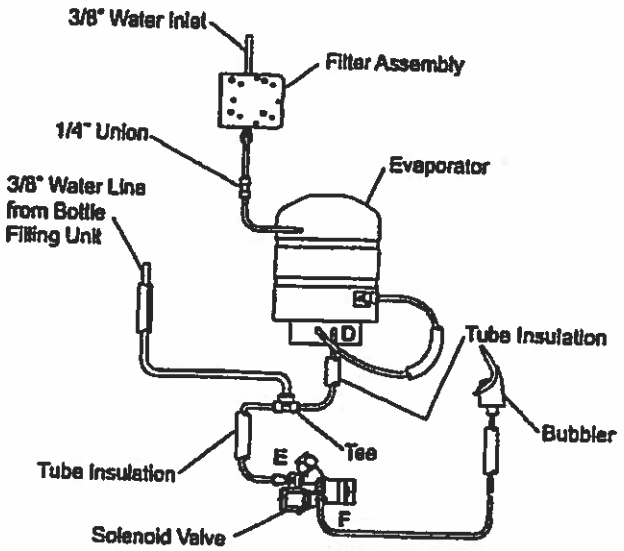

EZ Plumbing Diagram after Filter Installation & Pressurization Modifications
Fig. 7D

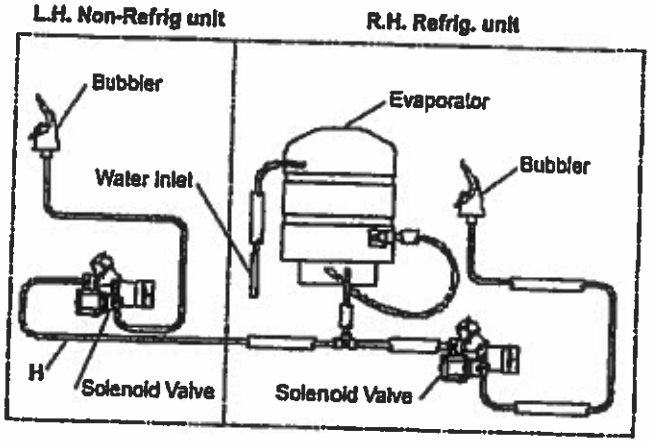

Standard EZ Bi-Level Pressurized Plumbing Diagram
Fig. 6E

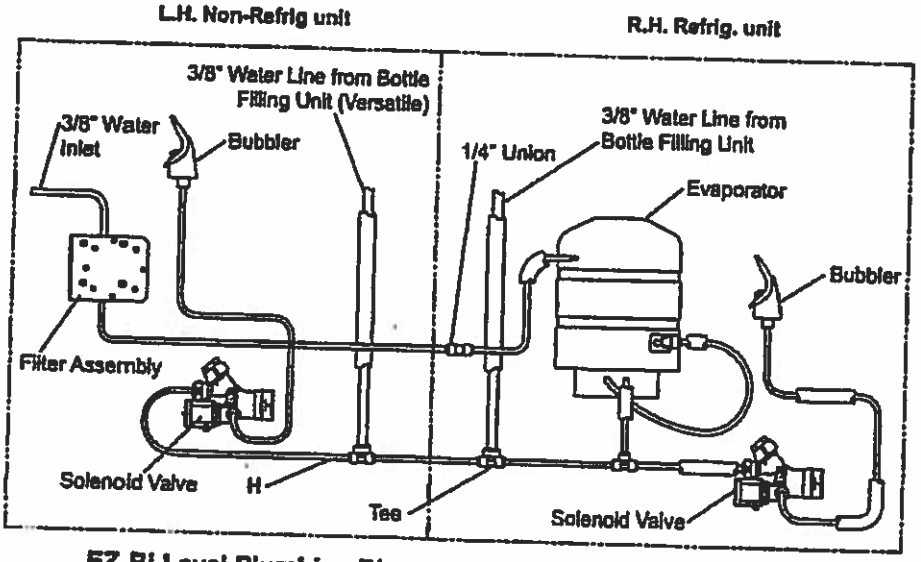

EZ Bi-Level Plumbing Diagram after Filter Installation & Bottle Filler Water Line Addition
Fig. 7E

Plumbing Diagrams for EZ Coolers w/model no's ending with 1, 1A, 2, & 3

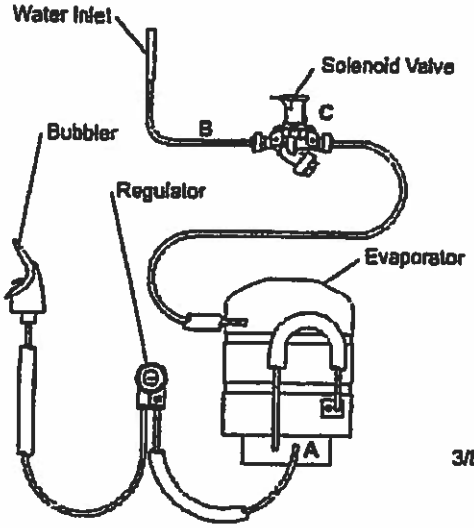

EZ Non-Pressurized Plumbing Diagram
Fig. 6F

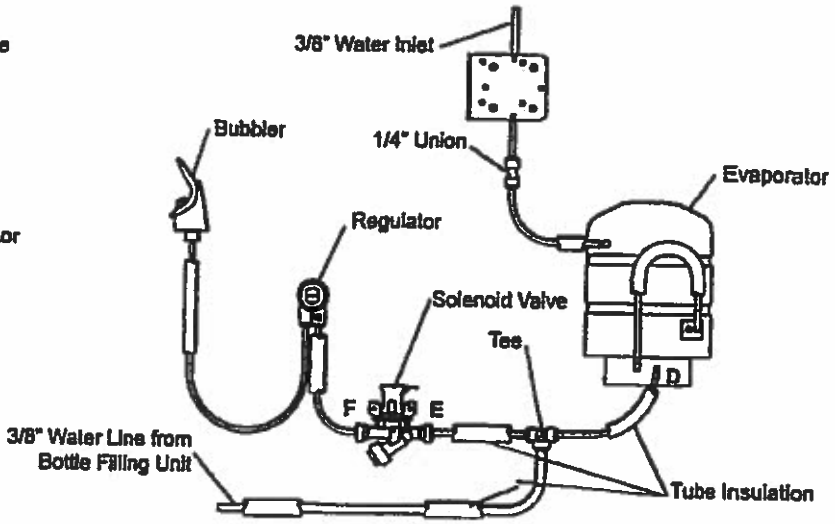

EZ Plumbing Diagram after Filter Installation & Pressurization Modifications
Fig. 7F

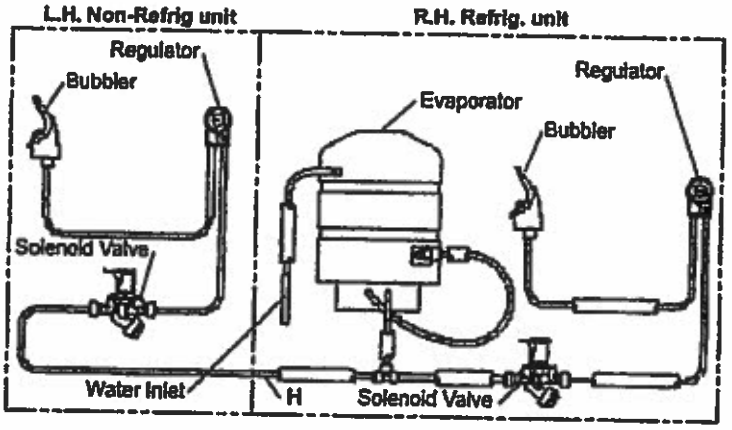

Standard EZ Bi-Level Pressurized Plumbing Diagram
Fig. 6G

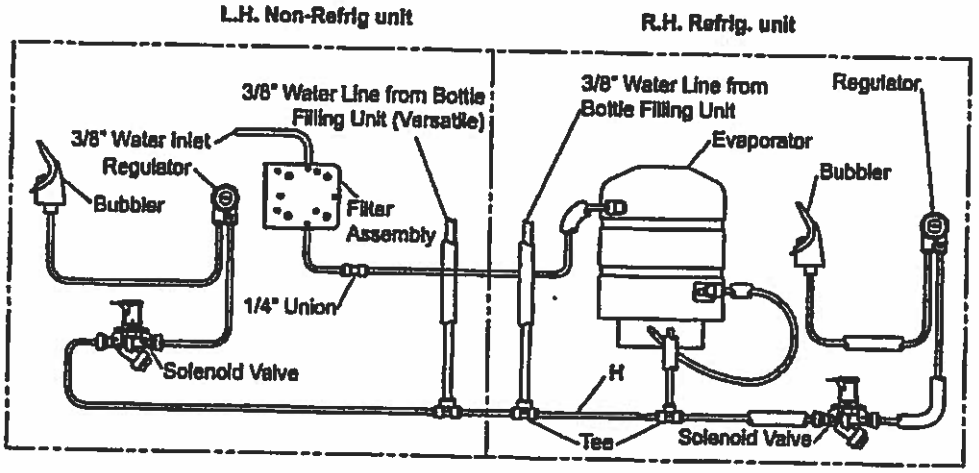

EZ Bi-Level Plumbing Diagram after Filter Installation & Bottle Filler Water Line Addition

Fig. 7G

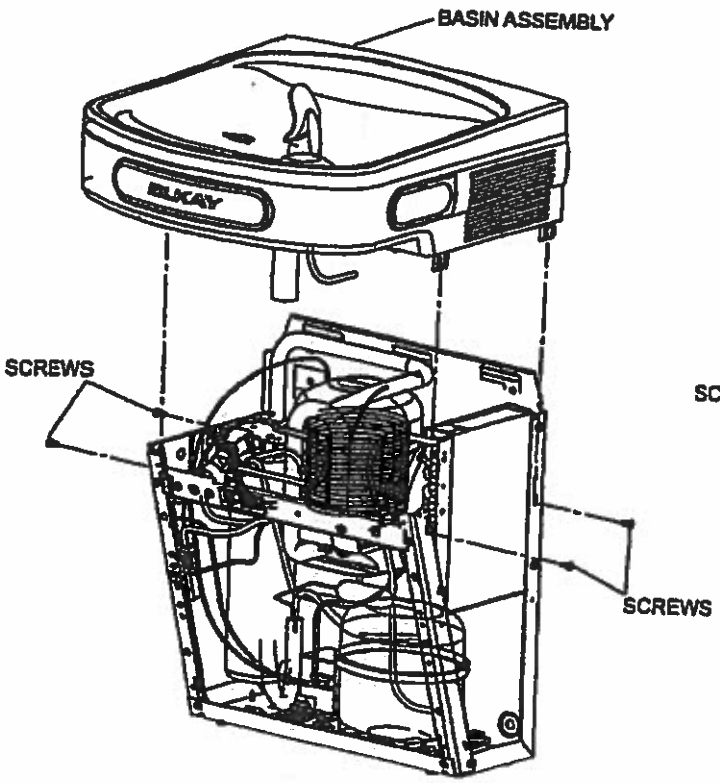

Basin Assembly Removal
Fig. 8

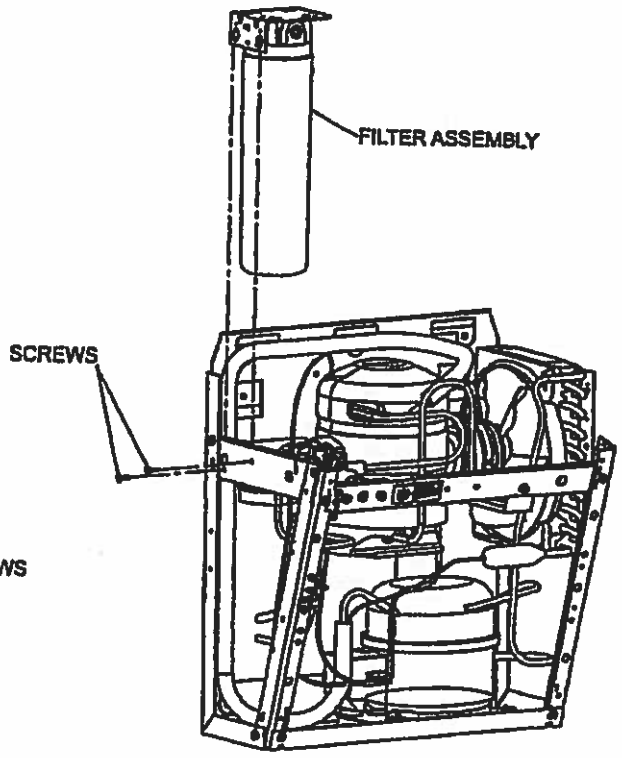

EWF3000 Filter Location
Fig. 9

BASIN ASSEMBLY PREPARATION

1. Remove (4) screws from basin/shroud assembly. Separate basin from shroud.
2. Remove bubbler.
3. Install bubbler on new basin.
4. Remove drain tail piece from rubber boot that is attached to the shroud.
5. Assemble shroud onto new basin.
6. Install branch line drain tail piece to rubber boot. Connect hose clamp and drain hose to branch line on tail piece and tighten hose clamp.
7. Reassemble Basin Assembly back on to unit. Connect the bubbler water line to the outlet side of the solenoid valve "F" (See Fig. 7), be sure to reconnect the black wire from the pushbar assembly back to the piggyback terminal on the solenoid valve, and the other black wire back to the cold control or power cord (non-refrigerated unit) and reattach drain to the trap. Retighten the 4 screws two per side (See Fig. 8).

FOR UNITS WITH MODEL NO'S. ENDING IN 1, 1A, 2, & 3

7a. Remove the white wire from the cold control and connect it to the power cord white wire. Reassemble Basin Assembly back on to unit. Connect the regulator water line to the outlet side of the solenoid valve "F" (See Fig. 7B), be sure to reconnect one black wire from the pushbar assembly back to the piggyback terminal on the solenoid valve. Connect the other black wire from the pushbar assembly to the piggyback on the cold control. Reattach drain to the trap and reinstall drain support screw to front cross brace. Reinstall "L" bracket to top back of unit with the 2 screws it was mounted with. Retighten the 4 screws two per side (see Fig. 8).

ALL STANDARD Bi-Level MODELS

After completing instructions 1 thru 7 or 7a from above on the non-refrigerated side, install filter head assembly per previous installation instructions and reinstall basin assembly to the non-refrigerated side, re-attach wiring, bubbler tube (or regulator tube) to solenoid valve and reinstall the Bi-Level cover plate to the left side of the unit. Reinstall non-refrigerated unit to wall and reinstall drain.

ALL Bi-Level Versatile MODELS

After completing instructions 1 thru 7 or 7a from above on the refrigerated side, install filter head assembly per previous installation instructions and reinstall basin assembly to the non-refrigerated side, re-attach wiring, bubbler tube (or regulator tube) to solenoid valve and reinstall the Bi-Level cover plate to the left side of the unit. Reinstall non-refrigerated unit to wall and reinstall drain.

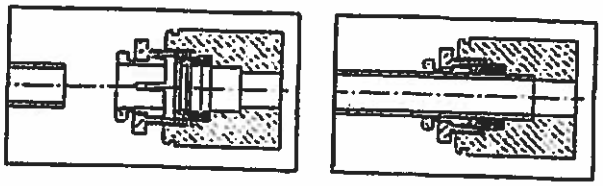

Note: Screw the locknut hand tight to seal
Fig. 10

OPERATION OF QUICK CONNECT FITTINGS

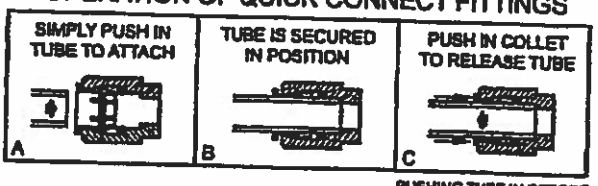

PUSHING TUBE IN BEFORE PULLING IT OUT HELPS TO RELEASE TUBE

Fig. 11

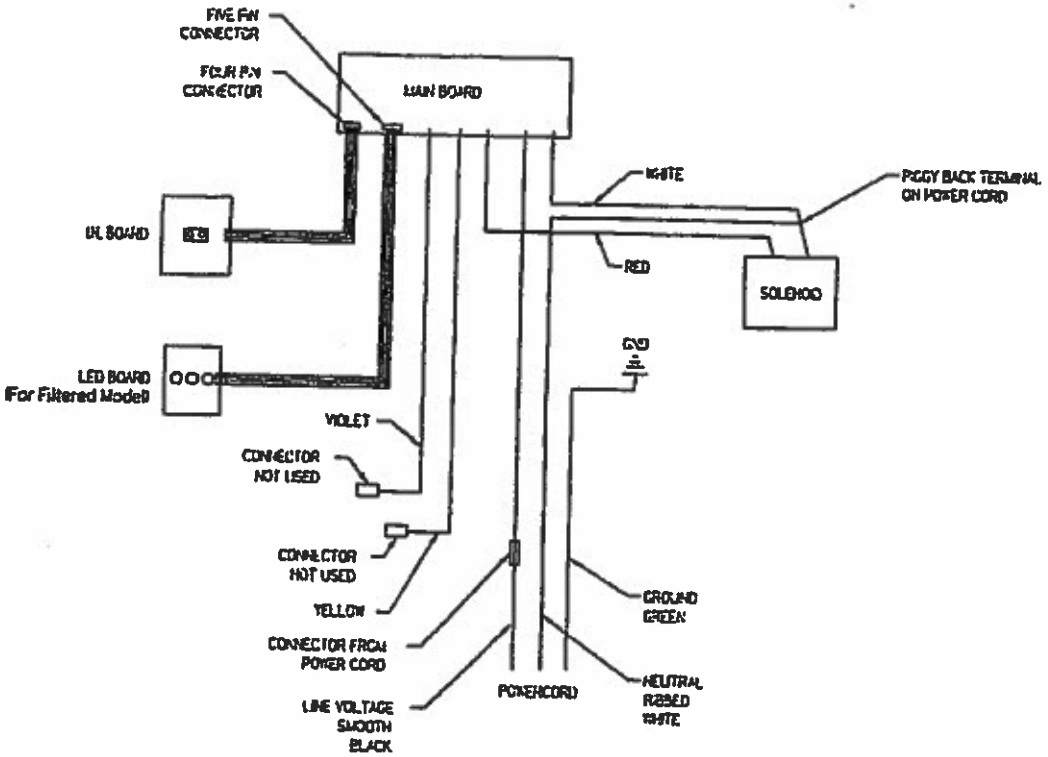

WIRING DIAGRAM - BOTTLE FILLER 115V

NOTE: UNITS PRODUCED 2008 AND BEFORE WILL NEED ADAPTERS TO SWITCH LINE AND NEUTRAL WIRES.

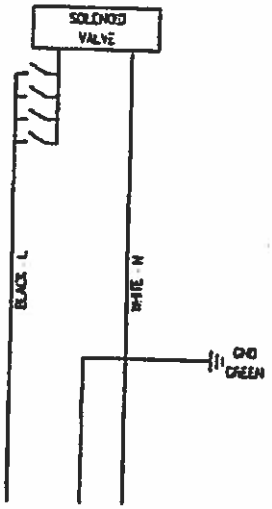

WIRING DIAGRAM - NON REFRIGERATED SIDE

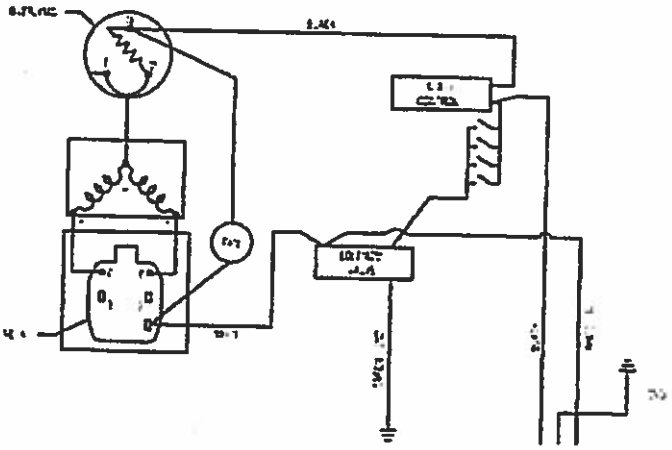

WIRING DIAGRAM - REFRIGERATED SIDE

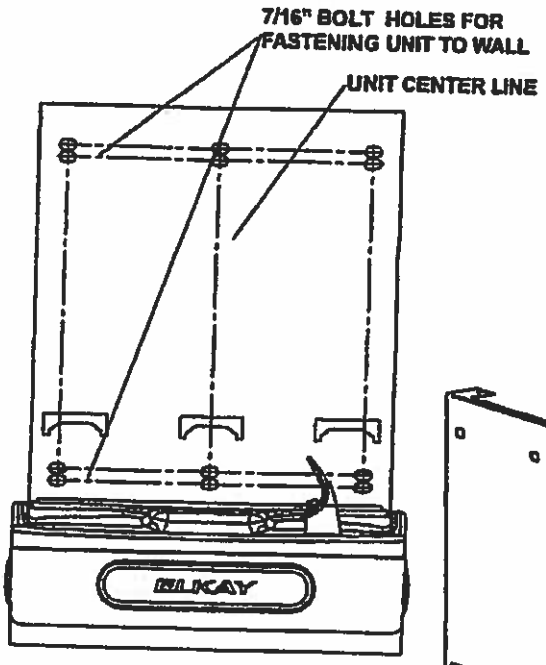

Fig. 12

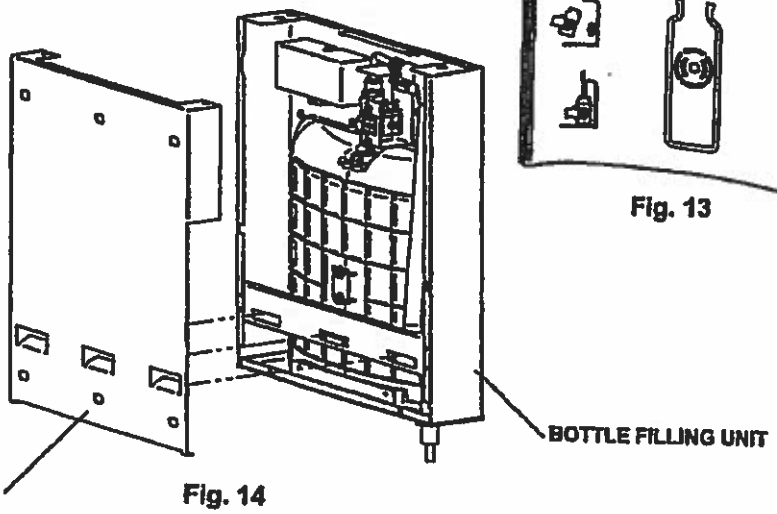

Fig. 14

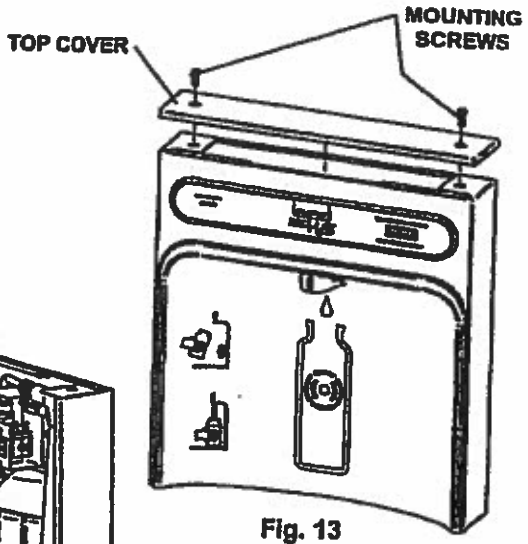

Fig. 13

BOTTLE FILLER INSTALLATION

1. Remove two (2) mounting screws with 5/32" Allen wrench holding top cover to Bottle Filler (See Fig. 13). Remove top cover. Note do not discard mounting screws, they will be needed to reinstall top cover.
2. Remove wall mounting plate from Bottle Filler. Place wall plate against wall on top of basin. Center the wall plate side to side with the basin. Mark the six (6) mounting holes with a pencil (See Fig. 12).
3. Remove wall mounting plate from wall. NOTE: Mounting plate MUST be supported securely. Add fixture support carrier if wall will not provide adequate support.
4. Install wall mounting plate to wall using six (6) 7/16" obround mounting holes (mounting bolts not included) (See Fig. 12). Use appropriate fasteners for your wall type.
5. Feed power cord & 3/8" water line through hole in tower/basin gasket (See Fig 15).
6. Install gasket on bottom of bottle filler tower with gasket support bracket & (2) screws (See Fig 16).
7. Lay Bottle Filler on water cooler basin and cut insulation from tube even with bottom of gasket, remove this insulation from the 3/8" tube, but do not discard. Feed the power cord and waterline through the hole on top of water cooler. NOTE: To prevent scratching the basin place a towel or soft cloth over the entire basin when working above it.
8. With the power cord, wire(s), and waterline through hole on top of water cooler place Bottle Filler on the three (3) angled tabs protruding from the wall (See Fig. 14) mounting plate installed on wall. Make sure round boss in gasket fits in hole of basin.
9. Once Bottle Filler is installed on wall plate tabs, waterline, wire(s) and power cord are installed properly, push top of Bottle Filler toward wall and line up top cover two (2) holes.
10. Reinstall Top Cover on Bottle Filler (See Fig. 13) with two mounting screws from step 1 above. Caution, do not over tighten screws.
11. Install remaining tube insulation to the water line from bottle filler, connect Bottle Filler waterline inside of the water cooler by connecting the 3/8" water line to the tee.
12. Install filter cartridge, remove filter from carton, remove protective cap, attach filter to filter head by firmly inserting into head and rotating filter clockwise.

NOTE: If existing plumbing rough-in locations (Drain, Water In, and Electric Supply) do not allow the filter to be mounted inside the cooler cabinet the filter can be installed horizontally below the unit. A retrofit kit is available to mount the filter beneath the cooler.

13. Turn water supply on and inspect for leaks. Fix all leaks before continuing.
14. Once unit has been inspected for leaks and any leaks found corrected, plug Bottle Filler and Cooler Unit into wall. Be sure to reinstall fuse to the circuit or switch the circuit breaker back to the "ON" position.
15. Once power is applied to Bottle Filler, the GREEN LED light should illuminate showing good filter status along with the LCD Bottle Counter.
16. Verify proper dispensing by placing cup, hand, or any opaque object in front of sensor area and verify water dispenses. Note: the first initial dispenses might have air in line which may cause a sputter. This will be eliminated once all air is purged from the line.
17. Once unit tests out, install Lower Panel back on water cooler. Unit is now ready for use.

BOTTLE FILLER GASKET

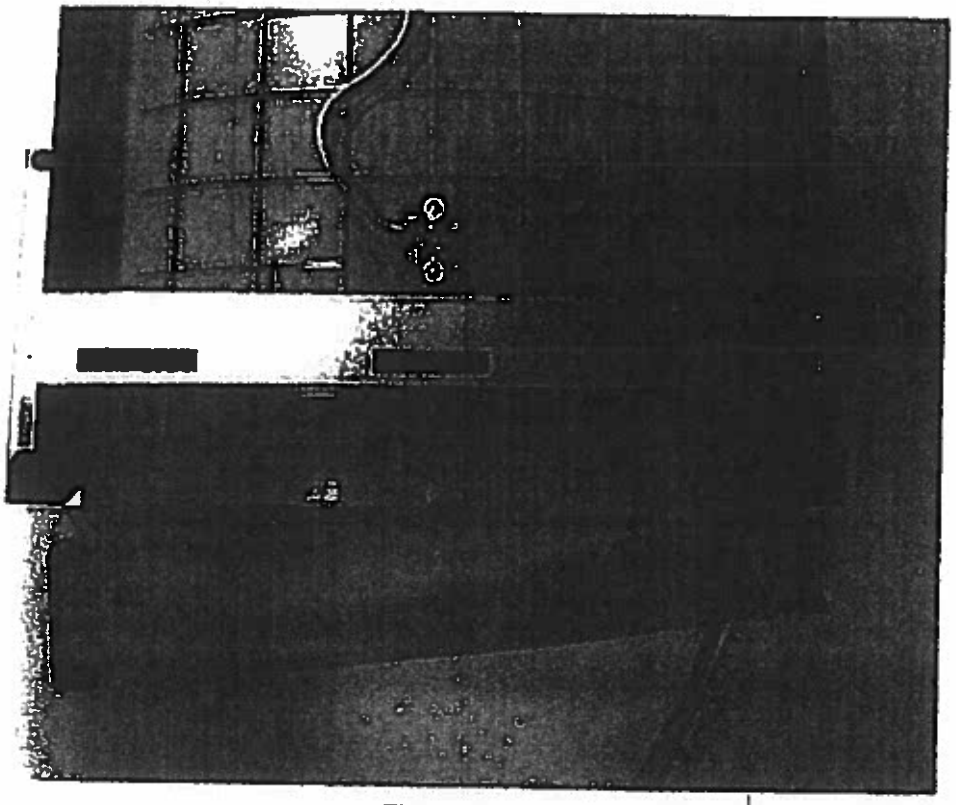

Fig. 15

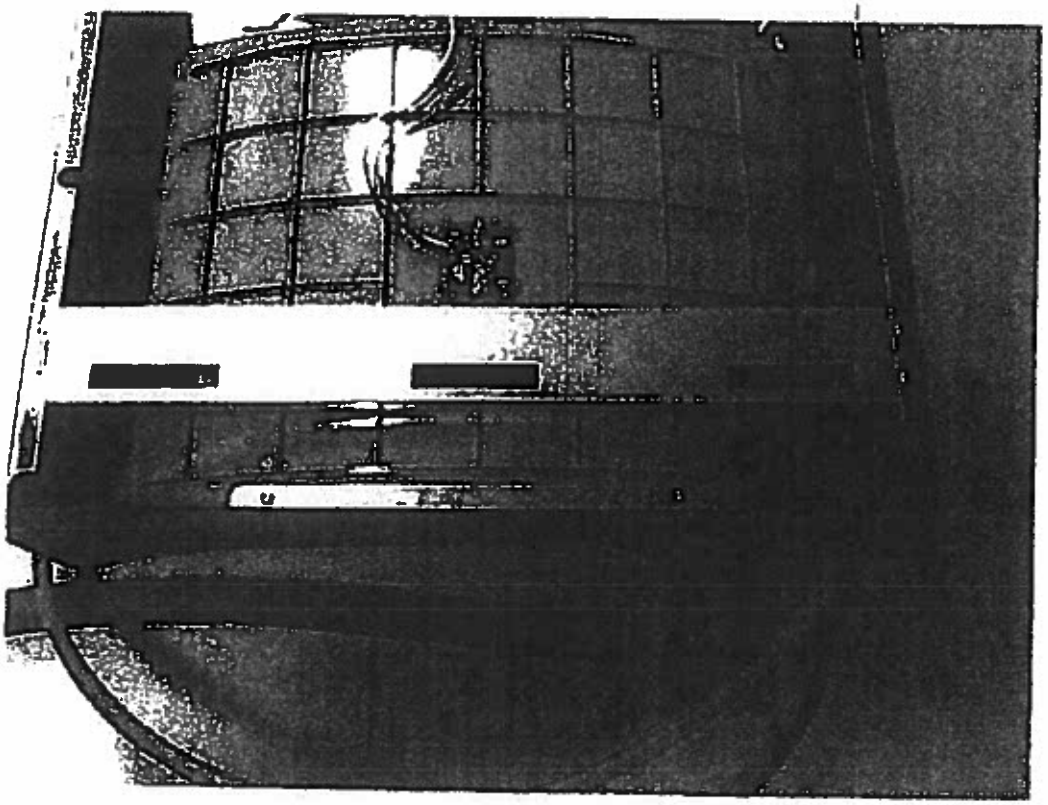

Fig. 16

WIRING MODIFICATION FOR NON-REFRIGERATED UNIT IN A BI-LEVEL COOLER IF BOTTLE FILLER COUNTER CONTINUOUSLY ADVANCES

1) **DISCONNECT POWER TO ALL UNITS BEFORE PROCEEDING!**
2) Disconnect ribbed wire (powercord) from the switch wire (from pushbar), add the female to female adapter to wire.
3) Remove the smooth larger black wire (powercord) from the solenoid valve. Connect ribbed wire with female adapter from step 2 to where the smooth black wire was connected.
4) Add the male to male adapter to the smooth wire removed in step 3.
5) Connect the smooth black wire with male adapter to the switch wire (from pushbar) removed in step 2.
6) Reconnect power to all units. Verify bottle filler counter advances only when water is flowing.
7) Once unit tests out, install lower panels back on water cooler. Units are ready for use.

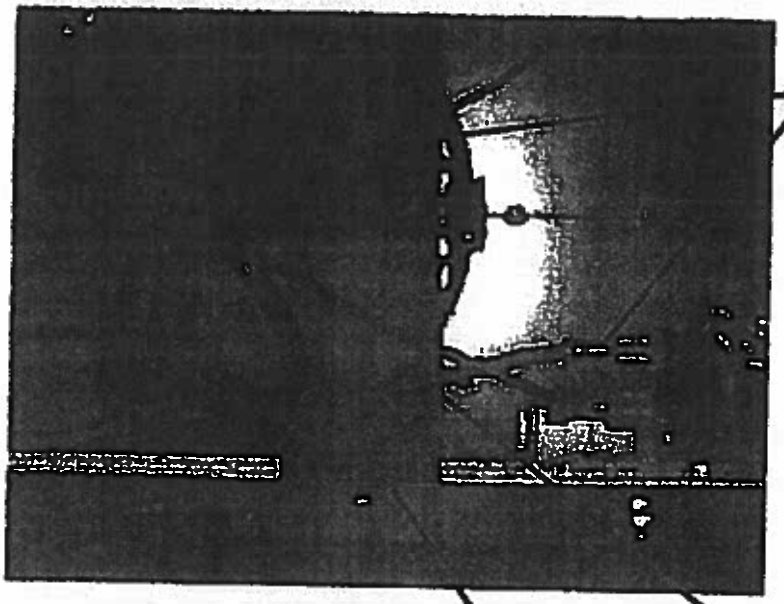

REVERSE THESE TWO WIRES ON THE NON-REFRIGERATED UNIT OF BI-LEVEL MODELS ONLY USING THE PROVIDED ADAPTERS.

POWERCORD BLACK RIBBED WIRE (NEUTRAL)

POWERCORD BLACK SMOOTH WIRE

MALE TO MALE ADAPTER

FEMALE TO FEMALE ADAPTER

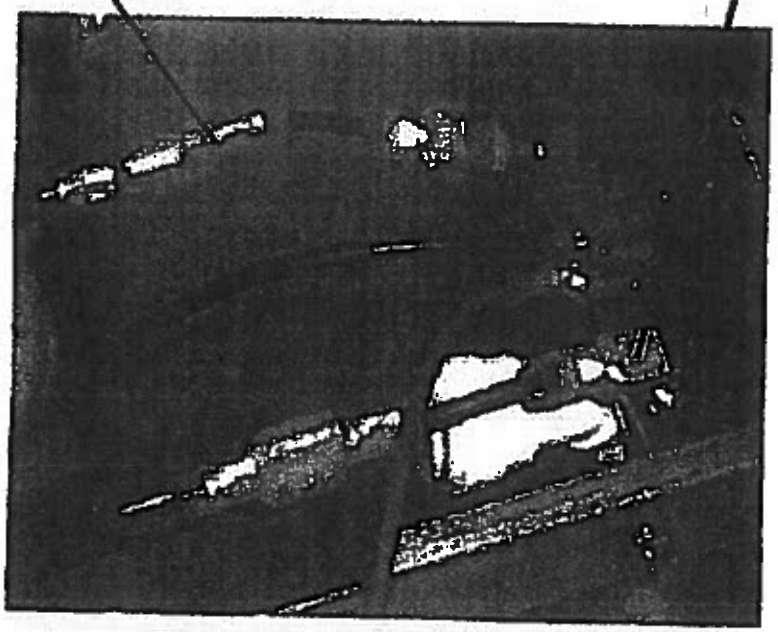

UNIT WITH WIRE ADAPTERS ADDED AND WIRED CORRECTLY

PLUMBING DIAGRAMS
VERSATILE BI-LEVEL

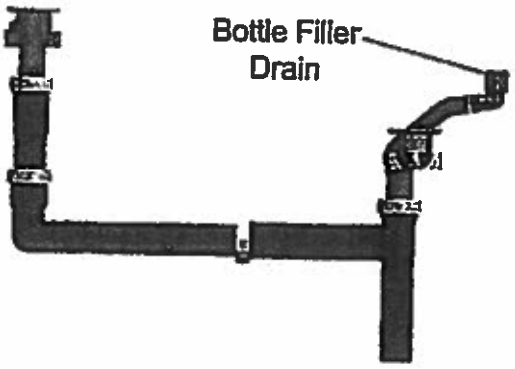

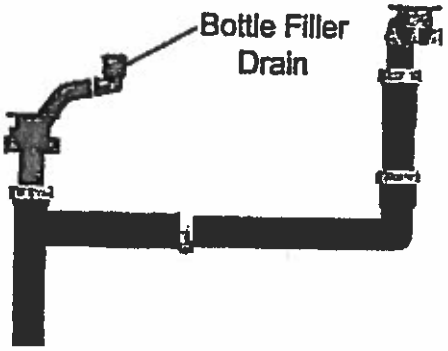

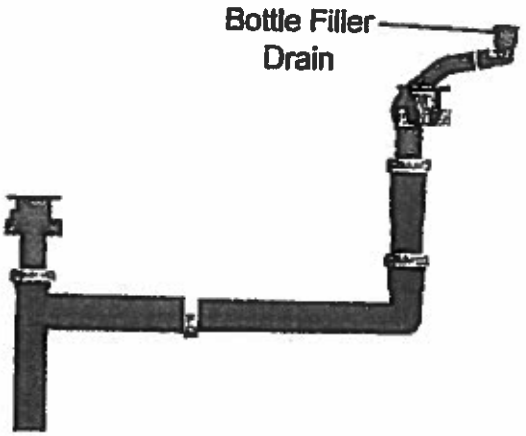

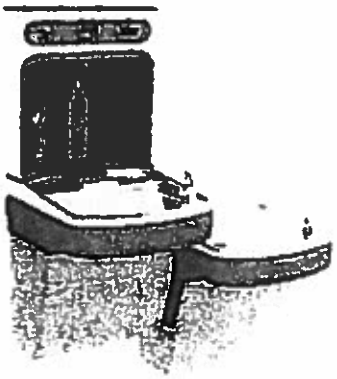

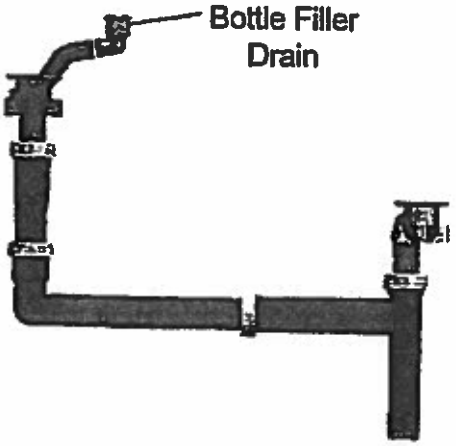

BF11 - BF12 PROGRAM
SETTING THE CONTROL BOARD

VERIFY CONTROL BOARD SOFTWARE

1) To verify the software program of the control board the unit will need to be shut down and restarted. The chiller (if present) does not need to be shut down and restarted.
2) The units lower panel must be open to access the power cord and wall outlet.
3) Shut down the unit by unplugging the power cord from the wall outlet.
4) Restart the unit by plugging the power cord back into the wall outlet.
5) Upon start up, the bottle count display will show the software designation of BF11 or BF12.

ACCESSING THE PROGRAMMING BUTTON

1) To access the program button, remove the top cover of the bottle-filler. Remove the two (2) screws holding top cover to bottle-filler with a 5/32" allen wrench. Remove top cover. Do not discard mounting screws, they will be needed to reinstall the top cover after programming operations are completed. The programming button is located at the top right side of the unit on the control board.
NOTE: When applicable, there is also an alternate reset button located on the lower part of the water cooler. After removing the bottom cover, the reset button will be located on the left side of the cooler, mounted on the side panel support.

RESET THE FILTER MONITOR

1) Instructions apply to filtered units only.
2) Depress the program button for approximately 2 seconds until the display changes then release. The display will change and scroll through two messages:
"RST FLTR" – Reset Filter Monitor
"SETTINGS" – System Settings Sub Menu
If the program button is not pushed again the display will scroll through the two messages above for three cycles and then default back to bottle count and be back in run mode.
3) When the display changes to "RST FLTR", depress the button again. The display will change to show "FLTR =". Depress the button again and the display will show "FLTR =0"
4) The Green LED should be illuminated indicating that the visual filter monitor has been reset.

SETTING RANGE OF THE IR SENSOR WHERE APPLICABLE

1) Depress the program button for approximately 2 seconds until the display changes then release. The display will change and scroll through two messages:
"RST FLTR" – Reset Filter Status LED
"SETTINGS" – System Settings Sub Menu
If the program button is not pushed again the display will scroll through the two messages above for three cycles and then default back to bottle count and be back in run mode.
2) When the display changes to "SETTINGS", depress the button again. The display will change to show
"RNG SET" - Range set for IR sensor.
"UNIT TYP" - Type of unit (REFRIG or NON-RFRG)
"FLT SIZE" - Select filter capacity
"RST BCNT" - Reset bottle count
3) When display shows "RNG SET" push program button once the display will show current value(can be 1 – 10) e.g. "RNG = 3".
4) Once display shows current value push the program button to scroll through value of 1 – 10. Select the desired range setting, "1" being closest to sensor and "10" being farthest away.
5) Once range is selected allow approximately 4 seconds to pass and then the display will go back to bottle counter and be in run mode.
6) Test bottle filler by placing bottle or hand in front of sensor to make sure water is dispensed.

SETTING UNIT TYPE

1) Depress the program button for approximately 2 seconds until the display changes then release. The display will change and scroll through two messages:
"RST FLTR" – Reset Filter Status LED
"SETTINGS" – System Settings Sub Menu
If the program button is not pushed again the display will scroll through the two messages above for three cycles and then default back to bottle count and be back in run mode.

Continued from below:

2) When the display changes to "SETTINGS", depress the button again. The display will change to show
"RNG SET" - Range set for IR sensor.
"UNIT TYP" - Type of unit (REFRIG or NON-RFRG)
"FLT SIZE" - Select filter capacity
"RST BCNT" - Reset bottle count
3) When display shows "UNIT TYPE" push program button once the display will show current value. Can be REFRIG or NON-RFRG
4) Push button once to change value. Once value is selected the display will show the new value. (Can be REFRIG or NON-RFRG)
"REFRIG" - stands for refrigerated product. In this setting the flow rate is estimated at 1.0 gallon per minute.
"NON-RFRG" - stands for nonrefrigerated product. In this setting the flow rate is estimated at 1.5 gallons per minute. Both "REFRIG" and "NON-RFRG" simulate 1 bottle equal to 20 oz.
5) Allow approximately 4 seconds to pass and the display will return to bottle counter and be in run mode.

RESETTING BOTTLE COUNT

1) Depress the program button for approximately 2 seconds until the display changes then release. The display will change and scroll through two messages:
"RST FLTR" – Reset Filter Status LED
"SETTINGS" – System Settings Sub Menu
If the program button is not pushed again the display will scroll through the two messages above for three cycles and then default back to bottle count and be back in run mode.
2) When the display changes to "SETTINGS", depress the button again. The display will change to show:
"RNG SET"- Range set for IR sensor.
"UNIT TYP" - Type of unit (REFRIG or NON-RFRG)
"FLT SIZE" - Select filter capacity
"RST BCNT" - Reset bottle count
If the button is not pushed again the display will scroll through the four messages above for three cycles and return to run mode.
3) When display shows "RST BCNT" push program button once the display will show current value, e.g. "00033183".
4) Once display shows current value push the program button once more to reset back to 0. The display will show BTLCT = 0 for approximately 2 seconds and then return to run mode showing 00000000 bottles.
NOTE: Once the bottle count is reset to zero there is no way to return to the previous bottle count.
5) Testing the bottle counter:
REFRIG units: Place bottle or hand in front of sensor for approximately 9 seconds to see bottle counter count 00000001.
(This is based on filling a 20 oz. bottle).
NON-RFRG units: Place bottle or hand in front of sensor for approximately 6 seconds to see bottle counter count 00000001.
(This is based on filling a 20 oz bottle).

SETTING FILTER CAPACITY

1) Depress the program button for approximately 2 seconds until the display changes then release. The display will change and scroll through two messages:
"RST FLTR" – Reset Filter Status LED
"SETTINGS" – System Settings Sub Menu
If the program button is not pushed again the display will scroll through the two messages above for three cycles and then default back to bottle count and be back in run mode.
2) When the display changes to "SETTINGS", depress the button again. The display will change to show:
"RNG SET"- Range set for IR sensor.
"UNIT TYP" - Type of unit (REFRIG or NON-RFRG)
"FLT SIZE" - Select filter capacity
"RST BCNT" - Reset bottle count
If the button is not pushed again the display will scroll through the four messages above for three cycles and return to run mode.
3) When display shows "FLT SIZE" push program button once. The display will show current value. Can be 3000GAL or 6000GAL.
4) Push program button again to display the desired "FLT SIZE".
5) Allow approximately 4 seconds to pass and the display will return to bottle counter and be in run mode.

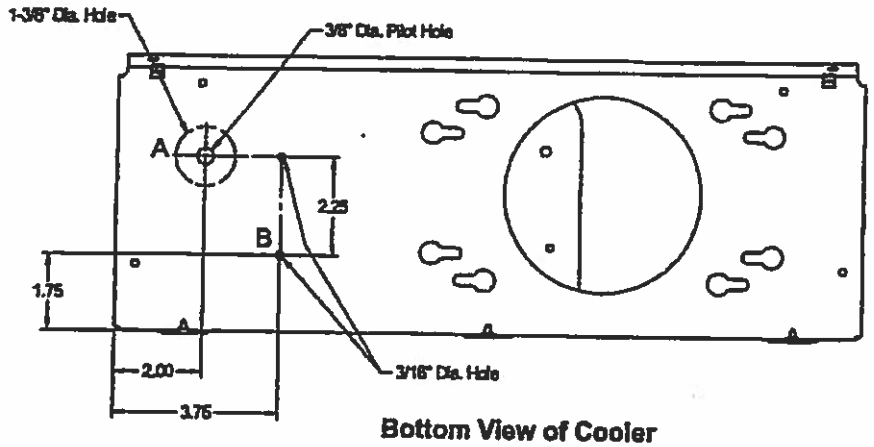

Bottom View of Cooler
Fig. 18

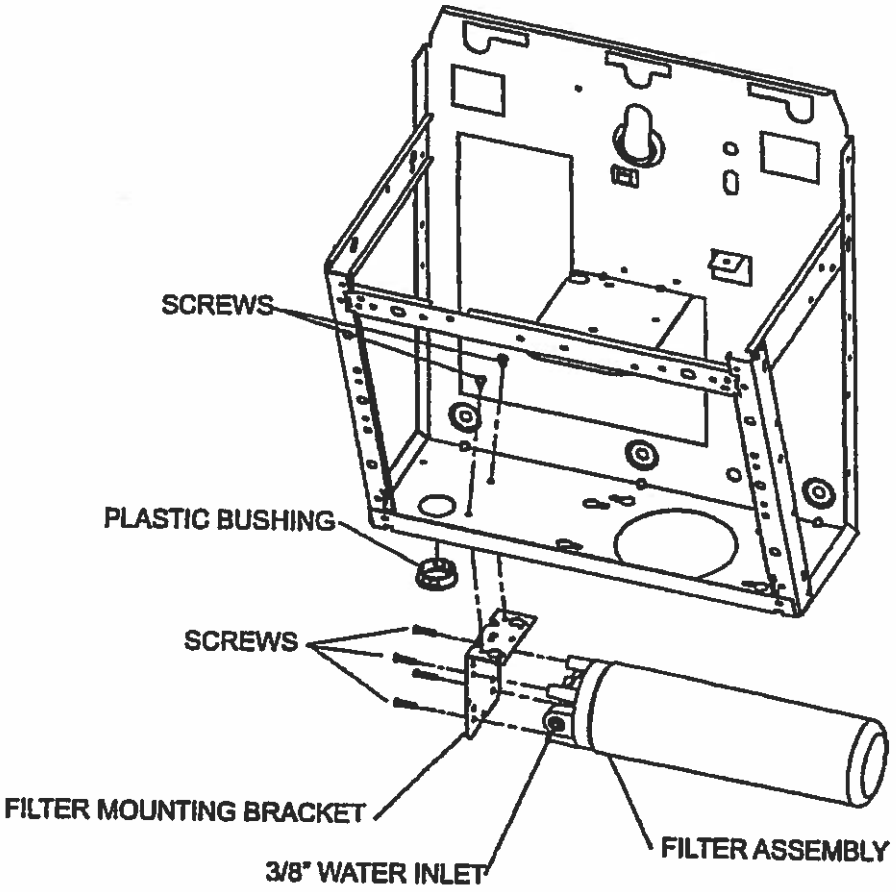

Alternate Filter Mounting Location Fig. 19

ALTERNATE FILTER MOUNTING LOCATION

1) Drill one 3/8" diameter pilot hole "A" as shown in Fig. 18.
2) Using the 1-3/8" dia. punch supplied with 98552C Kit - Retro Filter Mounting, punch a 1-3/8" dia. hole "A" at the 3/8" pilot hole, see Fig. 18.
3) Drill two 3/16" dia. hole at location "B" shown in Fig 18.
4) Remove Filter bracket from filter assembly and reinstall as shown in Fig. 19. Be sure the 3/8" water inlet is facing out.
5) Install plastic bushing (supplied) as shown into 1-3/8" hole, bushing must be used so waterlines will not be cut by sharp edges of base plate.
6) Install filter assembly to bottom of cooler as shown in Fig. 19 with 2-#8 sheet metal screws.
7) Run the inlet and outlet water lines to filter.
8) Use P/N 98551C KIT- LZ Filter Mounting Cover (Light Gray Granite), or P/N 98568C KIT- LZ Filter Mounting Cover (Stainless Steel), may be order to enclose the filter beneath the cooler (Not Shown).

WATERSENTRY® PLUS FILTER PARTS LIST
(See Fig. 20)

ITEM NO.	PART NO.	DESCRIPTION
1	51300C	Filter Assy-3000 Gal.
2	98926C	Kit-Filter Head Fittings-includes John Guest Fittings
3	0000000746	Assy-Filter & Brkt includes Filter Head/Mtg Brkt/ John Guest Fittings/Screws

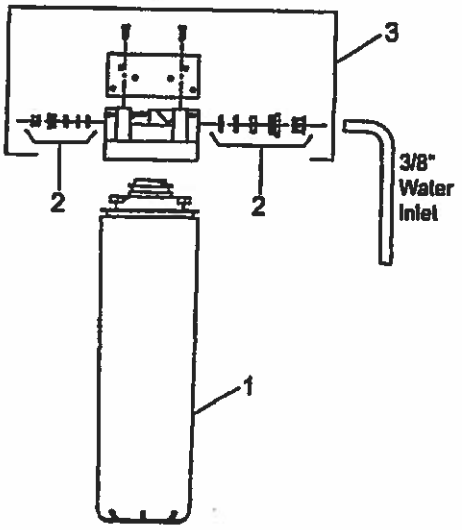

WATER FILTER EXPLODED VIEW

Fig. 20

REPLACEMENT PART KITS

PART NO.	DESCRIPTION
98543C	Kit - Electrical Package 115V
98631C	Kit - Electrical Package 220V
98544C	Kit - IR Sensor 115V
1000004573	Kit - Solenoid Valve Replacement 115V
1000004574	Kit - Solenoid Valve Replacement 220V
98546C	Kit - Aerator Replacement
98547C	Kit - Top Cover Replacement
1000001813	Kit - Drain Tower/Basin Gasket
98549C	Kit - Hardware & Waterway Parts
98551C	Kit - LZ Filter Mounting Cover (L)
98568C	Kit - LZ Filter Mounting Cover (S)
98552C	Kit - Retro Filter Mounting
0000001337	Kit - Basin Replacement
1000001812	Kit - Bottle Filler Drain
1000001877	Kit - Drain Replacement

PRINTED IN U.S.A.

REBMAN SYSTEMS, INC.

1909 North Ridge Rd. E., Unit #1
Lorain, OH 44055-3379
Phone: (440) 277-4949
Fax: (440) 277-6755

EXHIBIT VII.A.6

ALARM SYSTEM(S) MONITORING AGREEMENT

This Agreement is dated 09/14/2020 between Rebman Systems, Inc., an Ohio Corporation (the "Company") and you (the "Customer"). Thi agreement covers the monitoring of alarm system(s) (the "System") and any services requested below for the location listed below (the "Premises"). Th Company has written this Agreement in simple, easy-to-read language because it wants the Customer to understand it. Please feel free to ask any questions.

INTENDING TO BE LEGALLY BOUND, WE AGREE AS FOLLOWS:

Customer Name(s): Clearview Bus Garage
Premise Address: 100 North Ridge Rd. West
Lorain, OH 44052

Phone: ( )

Billing Name(s): Clearview Local Schools
Billing Address: 100 North Ridge Rd. West
Lorain, OH 44052

Phone: (440) 233-5412

TYPE OF ACCOUNT: ☐ Residential ☒ Commercial **ACCOUNT #:** RB7249 **CITY:** 67 **CSID:** E0
TYPE OF MONITORING: ☐ Telephone ☐ Cellular ☒ Internet ☒ Cellular Backup
TYPE OF SYSTEM: ☐ Intrusion ☒ Fire ☐ Panic ☐ Hold-Up ☐ Environmental ☐ Elevator ☐ Medical

CHARGES AND FEES:	Annual Payment	Qtrly Payment
Monitoring Fee/Weekly Auto Test*:	$ / Month	$ / Month
Monitoring Fee/Daily Auto Test*:	$ 44.00 / Month	$ / Month
Other:	$ / Month	$ / Month
Other:	$ / Month	$ / Month
Take Over Charge (Due at signing)	$	

FORM OF PAYMENT: ☒ Invoice ☐ Ck#_____ ☐ Credit Card
C/C #: _____ Exp: _____
C/C Billing Address _____
_____ Ck Digits: _____

ALL FEES ARE DUE IN ADVANCE AND WILL BE INVOICED:
☒ Yearly ☐ Semi-Annual ☐ Quarterly ☐ Monthly

*NOTE: The Customer acknowledges that it is entitled to send up to 68 signals per month to the monitoring center as part of the monthly monitoring fee. Fo each additional signal generated by a Customer during a month, Customer may be assessed an excessive traffic charge of 15 cents per signal. This charge shal be invoiced to Customer on a quarterly basis. A signal is a transmission by Customer to the monitoring center which reports a condition. Example of signals that report conditions are: opening and closing reports, alarms, supervisory conditions and auto tests.

THE FOLLOWING SPECIFIC TERMS APPLY ONLY IF A CHARGE FOR THEM IS SHOWN ABOVE AND THEY ARE REQUESTED (CHECKED) BELOW:

☒ A) Monitoring. The Company agrees to monitor signals from the System for an initial term of one (1) year from the date of this Agreement. The Customer agrees to pay the Company the monitoring fees. After the initial term, the monitoring services will automatically renew for successive 1-year terms. Once the Company receives a signal, the Company will try to notify the agency(s) and/or person(s) identified on the Customer's information sheet. However, the Company will not notify anyone if it reasonably believes that notification is not required. The Customer agrees to give the Company a completed information sheet and to update it as necessary. The Company is entitled to rely solely on the Customer's information sheet. The Company is not responsible for trying to contact anyone else. If the Company cannot connect the System to the telephone or internet lines, then the Customer must contact the telephone company and/or internet provider, which will install and bill the Customer directly for any services or equipment. The Customer understands that no form of monitoring is error-free. The Customer also understands that the Company is not responsible for any interruption of service due to any cause beyond the Company's control, such as faulty telephone or internet lines, loss of cell, telephone or internet service or any damage or destruction to the Company's equipment or facilities. The Company is not required to supply monitoring service to the Customer while such interruptions continue. If the Customer requests, however, the Company will give the Customer a pro-rata refund if the interruption lasts more than 48 hours and is due to any damage or destruction to the Company's equipment or facilities.

☐ B) Take Over. The Company agrees to take over the operation of the Customer's existing System and the Customer agrees to pay the charge for taking it over. The Customer represents that it owns the System and no warranties by Company are assumed. After the take over, the Company will always own the transmitting device, which contains the Company's proprietary data.

CREDIT INFORMATION

By the Customer's authorized signature below, the Customer authorizes Company or its' subsidiaries or affiliates to request and obtain credit history from a credit bureau or other agency providing credit information, and that said credit bureau or other agency has Customer's permission to release this credit information to Company, or its' subsidiaries or affiliates.

THE CUSTOMER ACKNOWLEDGES THAT IT HAS RECEIVED A COPY OF THIS AGREEMNT AND ALL ITS ATTACHMENTS. THE CUSTOMER ACKNOWLEDGES THAT IT HAS READ AND UNDERSTANDS THIS AGREEMENT, ESPECIALLY THOSE SECTIONS ON THE REVERSE SIDE RELATING TO ITS PROTECTION OF THE COMPANY AND THE COMPANY'S LIMITED LIABILITY AND WARRANTY.

(CONSUMER TRANSACTIONS ONLY) YOU MAY CANCEL THIS TRANSACTION AT ANY TIME PRIOR TO MIDNIGHT OF THE THIRD BUSINESS DAY AFTER THE DATE OF THIS TRANSACTION. PLEASE SEE THE ATTACHED NOTICE OF CANCELLATION FORM FOR AN EXPLANATION OF THIS RIGHT.

CUSTOMER:

_____
Customer 1 Name (Please Print)

REBMAN SYSTEMS, INC. (COMPANY)

By: _____
Salesperson

By: Lisa M Casada

Reset Data Fields

EMERgency 24 SUBSCRIBER DATA SHEET

999 E. Touhy Ave., Ste. 500, Des Plaines, IL 60018, Phone: (773) 725-0222, (800) 800-3624, Fax: (773)286-1992

ACCT # RB7249 STRESS CODE _____ TIME ZONE: E C M P A H P ☑E ☐Y ☐Q ☐ CHECK HERE FOR DATA VALIDATION FEG ☐	PASSCODES/PASSWORDS (3-10 CHARACTERS) (_____) (_____) (_____) (_____) (_____) (_____) (_____) (_____)	AUTOMATIC TEST – CIRCLE ONE MONTHLY (FREE) WEEKLY: DAY OF WEEK _____ DAILY WINDOW: __ __ : __ __ TO __ __ : __ __ see ** to enter autotest condition code

SUBSCRIBER NAME: Clearview Bus Garage

ADDRESS: 100 North Ridge Rd. APT./STE./BLDG./FLR # _____

CITY/State/Zip: Lorain STATE: OH ZIP CODE: 44052

SUB. PRIMARY PHONE #: (440) 233-5412 SUB. SECONDARY PHONE#: ( )

SPECIAL INSTRUCTIONS:

POLICE/CITY PERMIT #:

DEALER #: 0198 DEALER PHONE #: (440) 277-4949 MONITOR START DATE: 09 / 14 / 2020

EQUIPMENT:

CALL LIST: (PARTIES WILL BE CALLED IN SEQUENCE UNTIL REACHING ____ OF THEM)
ADDITIONAL ENTRIES CAN BE MADE ON ADDENDUM FORMS AVAILABLE FROM THE DATA ENTRY DEPARTMENT

TYPE	DESCRIPTION	NAME	PRIMARY PHONE	COMMENTS - (EXT BEEPER, WORK, HOME)
P1	PARTY		( ) -	
P2	PARTY		( ) -	
P3	PARTY		( ) -	
P4	PARTY		( ) -	
P5	PARTY		( ) -	
P6	PARTY		( ) -	
P7	PARTY		( ) -	
P8	PARTY		( ) -	
P9	PARTY		( ) -	
P10	PARTY		( ) -	
REQUIRED FOR ACTIVATION				
A1	POLICE		( ) -	2ND PHONE
A2	FIRE		( ) -	2ND PHONE
A3	MEDICAL		( ) -	2ND PHONE
A4	OTHER		( ) -	2ND PHONE

COMMERCIAL ACCOUNTS -- VERIFY VALIDITY OF ALARM SIGNALS DURING BUSINESS HOURS ONLY

Sample	MONDAY	TUESDAY	WEDNESDAY	THURSDAY	FRIDAY	SATURDAY	SUNDAY
(09:00)-OPEN	(__ : __)	(__ : __)	(__ : __)	(__ : __)	(__ : __)	(__ : __)	(__ : __)
(18:30)-CLOSE	(__ : __)	(__ : __)	(__ : __)	(__ : __)	(__ : __)	(__ : __)	(__ : __)
VERIFY VALIDITY OF ALARM SIGNAL ON THESE CONDITIONS:	(__)	(__)	(__)	(__)	(__)	(__)	(__)

FORMAT: (REQUIRED FOR ACTIVATION)
☐3+1/4+2 ☐Radionics/Modem I/O ☐DMP ☐Contact ID ☐S.I.A. ☐I.T.I.

** ENTER ALL CONDITION TRANSMISSION POSSIBILITIES: (CODE RANGES ARE ALLOWED i.e. 3 TO 8 = BURG)

CODE TRANSMITTED TO EMERGENCY 24	AUTHORITY CODE (A1-A4):	DESCRIPTION	CALLBACK OPTION

CALLBACK OPTIONS
(CHOOSE ONLY ONE)

0 = A-P-C	1 = S-A-P-C
2 = P-C	3 = C
4 = L	5 = S-C
6 = S-P	8 = P
9 = S,HA;PHA;C	10 = S,HA;C
11 = A	12 = C IP
13 = P IP	14 = S,HA;P
15 = S-P-C	16 = A-S-P-C
17 = SHA; PHA, A	

S = CUSTOMER L = LOG ONLY
A = AUTHORITY HA = NO ANSWER
P = PARTY IP = TOP PRIORITY
C = INSTALLATION COMPANY

THIS AGREEMENT IS SUBJECT TO THE TERMS AND CONDITIONS SET FORTH IN THE SUBSCRIBER MONITORING AGREEMENT.

than one (1) year after the incident giving rise to the claim occurred. In addition, any such legal proceeding shall not be heard before a jury. EACH PARTY GIVES UP ANY RIGHT TO A JURY TRIAL.

13. LIMITATION OF LIABILITY; THIRD PARTY INDEMNIFICATION. It is agreed that EM24 is not an insurer and that it is not the intention of the parties that EM24 assume responsibility for any loss occasioned by misfeasance or negligence in the performance or non-performance of the services under this Agreement or for any loss or damage sustained through burglary, theft, robbery, fire or other cause or any liability on the part of EM24 by virtue of this Agreement or because of the relation hereby established. If there shall, notwithstanding the above provisions, at any time be or arise any liability on the part of EM24 by virtue of this Agreement or because of the relation hereby established, whether due to a breach of this Agreement, the negligence of EM24, or otherwise, such liability is and shall be limited to and fixed at the sum of five hundred dollars ($500.00). Such limit of liability is not a penalty and this limited liability shall be complete and exclusive. That in the event SUBSCRIBER desires EM24 to assume greater liability for the performance of its services hereunder, a choice is hereby given to obtain a higher limitation of liability by paying a periodic extra charge and a rider shall be attached to this Agreement setting forth the amount of the additional limited liability of EM24 and the additional charge(s). That the rider and additional obligation exist shall in no way be interpreted to hold EM24 as an insurer. If anyone other than SUBSCRIBER asks EM24 to pay for any harm or damages (including property damage, personal injury or death) connected with or resulting from (i) a failure of the monitoring services, (ii) EM24's negligence, (iii) any other improper or careless activity of EM24 in providing the services or (iv) a claim for indemnification or contribution, SUBSCRIBER will repay to EM24 (a) any amount which a court orders EM24 to pay or which EM24 reasonably agrees to pay, and (b) the amount of EM24's reasonable attorney's fees and any other losses and costs that EM24 may pay in connection with the harm or damages.

14. SUBSCRIBER hereby releases discharges and agrees to hold EM24 harmless from any and all claims liabilities, damages, losses or expenses arising from or caused by any hazard covered by insurance resulting from or related to this service contract, whether said claim is made by SUBSCRIBER and/or SUBSCRIBER's ALARM CO., agent or insurance company or by any other parties claiming under or through SUBSCRIBER and/or the SUBSCRIBER's ALARM CO.. SUBSCRIBER agrees to indemnify EM24 against, defend and hold EM24 harmless from any claims for subrogation which may be brought against EM24 by any insurer or insurance company or its agents or assigns, including payment of all damages, expenses, costs and attorneys fees.

15. EM24 HEREBY DISCLAIMS ALL WARRANTIES, EXPRESS OR IMPLIED, INCLUDING THOSE OF MERCHANTABILITY OR FITNESS THAT ITS SERVICES WILL AVERT, DETER OR PREVENT ANY LOSS WHICH MONITORING MIGHT ALLEVIATE OR MITIGATE. EM24 DOES NOT REPRESENT OR WARRANT THAT THE SYSTEM OR SERVICES WILL PREVENT ANY LOSS OR INJURY DUE TO BURGLARY, HOLD UP, FIRE, OR OTHERWISE, OR THAT THE SYSTEM OR SERVICES WILL IN ALL CASES PROVIDE THE PROTECTION FOR WHICH THEY ARE INTENDED. SUBSCRIBER ACKNOWLEDGES AND AGREES THAT: (A) EM24 HAS MADE NO REPRESENTATIONS OR WARRANTIES, EXPRESS OR IMPLIED, AS TO ANY MATTER WHATSOEVER, NOR HAS SUBSCRIBER RELIED ON ANY REPRESENATIONS OR WARRANTIES EXPRESS OR IMPLIED: AND (B) SUBSCRIBER ASSUMES ALL RISK OF LOSS OR DAMAGE TO SUBSCRIBER'S PREMISES OR TO THE CONTENTS THEREOF; AND ASSUMES ALL RISK OF INJURY (INCLUDING PERSONAL INJURY OR DEATH) TO PERSONS USING OR ON THE PREMISES. EM24 MAKES NO REPRESENTATION OR WARRANTY AS TO THE PROMPTNESS OF ITS RESPONSE. SUBSCRIBER AGREES THAT EM24 HAS NO CONTROL OVER THE RESPONSE TIME OR CAPABILITY OF ANY AGENCY OR PERSON WHO MAY BE NOTIFIED AS A RESULT OF THE SYSTEM OR SERVICES BEING USED. SUBSCRIBER ACKNOWLEDGES THAT: (A) SUBSCRIBER SHOULD OBTAIN INSURANCE FOR THE PROTECTION OF THE PREMISE, ITS CONTENTS, THE SUBSCRIBER(S) AND ANY OTHERS WHO MAY OCCUPY THE PREMISE AND/OR USE THE SYSTEM AND SERVICES, (B) SUBSCRIBER HAS READ AND UNDERSTOOD ALL OF THIS AGREEMENT, PARTICULARLY PARAGRAPHS 13 AND 14 WHICH SET FORTH EM24'S MAXIMUM LIABILITY IN THE EVENT OF ANY LOSS, INJURY OR DAMAGE TO SUBSCRIBER OR ANYONE ELSE.

16. Any additions or amendments to the SUBSCRIBER MONITORING AGREEMENT TERMS & CONDITIONS must be signed by all three parties. No verbal agreements shall alter the terms of this Agreement. Your signature acknowledges that you agree to the terms set forth in the above Agreement and that you have been provided with a copy of this Agreement.

17. Should there arise a conflict of terms or conditions between this agreement and a purchase order, it is agreed that this contract shall be supreme and binding.

18. SUBSCRIBER acknowledges and agrees that this Agreement shall be binding upon SUBSCRIBER upon either: (1) SUBSCRIBER's receipt of a signed copy of this Agreement, or (2) EM24 begins monitoring service. SUBSCRIBER acknowledges and agrees that SUBSCRIBER may not receive a copy of this Agreement signed by EM24 and such lack of receipt shall not, in any way, invalidate or otherwise affect this Agreement.

SUBJECT TO THE SUBSCRIBER DATA ON PAGE ONE AND THE TERMS AND CONDITIONS ON THIS PAGE AND THE REVERSE SIDE OF THIS PAGE.

Subscriber (print) Clearview Bus Garage _____ executed this _____ day of _____, 20__

By (sign) _____ Title _____

Subscriber's Alarm Company Rebman Systems, Inc.

By (sign) Sara M Canada Title Administrative / Marketing Assistant

Emergency Twenty Four, Inc.

By (sign) _____ Title _____

Revised 6-2010

AlarmNet®

Subscriber Communications Agreement

Subscriber Info: ☐ Check here if name change/reinstatement	**Subscriber Number:** RB7249 City: 67 CSID: E0
Name(s): Clearview Bus Garage Address: 100 N Ridge Rd. Address 2: City: Lorain State: OH 44052 Telephone: (440)	**Equipment Type** ☐ AlarmNet-A 1-Way ☐ AlarmNet-A 2-Way ☐ AlarmNet-G ☐ AlarmNet-M ☐ AlarmNet-I **Supervision Level** ☐ UL AA (5 min) ☐ UL Fire (24 hr, Dual Site) ☐ Grade A (24 hr, Dual Site) ☐ Standard (48 hr, Single Site) ☐ Single Site (24 hr, Single Site) ☐ Daily ☐ Monthly ☐ Other

Dear Subscriber,
AlarmNet is pleased to provide the AlarmNet security network (the "Network") through your central station monitoring company, Emergency Twenty-Four, Inc. ("EM24"). The purpose of this agreement is to make clear our responsibilities in providing the Network, and to have you understand what you can expect of us. No security system is a substitute for proper caution or insurance. If we are to provide access to the Network on an economical basis, we can not be insurers against loss. Therefore, this agreement, among other things, spells out the limitations of our liability to you and others. In addition, since this Network may use a radio transmitter that is authorized and regulated by the FCC and installed in Your premises, we must, in case of emergency, be able to have access to the radio transmitter. We thank you for reading this agreement and hope to serve you for many years to come. - AlarmNet, Inc.

ACCEPTANCE
By Your signature, You acknowledge that: (a) You have read the entire Agreement, including the second page, prior to signing, and understand and accept its contents, including specifically the limitations on the obligations of the parties and the limitations on their liability; and, (b) You have no verbal understanding with anyone changing or modifying any term or condition of this agreement. Even if AlarmNet has not approved this Agreement, all of its terms are binding on You as soon as, and for as long as, You use the Network. This Agreement maybe signed in counterparts and returned to EM24. If you desire, a signed copy will be returned to you. You may cancel this Agreement prior to midnight of the third business day following the day of Your signing without further obligation by notifying EM24 in writing.

(to be signed by SUBSCRIBER(S):	(to be signed by AlarmNet/Ademco):
Authorized Signature Date	AlarmNet, Inc.
Authorized Signature Date	Honeywell International Inc., acting through the Ademco business

1. Parties. This is an Agreement between AlarmNet, Inc., a Delaware corporation, located at 160 Eileen Way, Syosset, New York, 11791, which provides a security communications network ("the Network") to your central station, Honeywell International, Inc., acting through the Ademco business of its Security Solutions division, "Ademco", a Delaware Corporation, located at 165 Eileen Way, Syosset, New York, 11791, the manufacturer of certain components of the alarm, and you, the subscriber, ("You"), the person or entity in whose residence or place of business alarm Equipment is or will be installed, and includes all officers, directors, employees, agents, guests and visitors of Yours. You may have entered into a separate written agreement with Emergency Twenty-Four, Inc. ("EM24"), which will provide or arrange for central station monitoring of the Equipment installed at Your premises, which Equipment may have been installed by EM24 or an installing company ("Installer"). Your relationships with EM24 and Installer are governed by Your separate agreements with them.

2. Term and Cancellation. This Agreement shall continue in effect on a day-to-day basis starting on the day the alarm Equipment is connected to the central station and shall be automatically renewed each day unless either party shall notify the other that it no longer wishes to provide and/or use the Network. While You may cancel this Agreement at any time, all of its terms and conditions shall continue in effect for so long as Your alarm Equipment utilizes the Network in any way. If AlarmNet ceases providing the Network, no party shall have any liability to You. You must look exclusively to EM24 or Installer for refunds of any amounts pre-paid by You to EM24 or Installer for monitoring services. AlarmNet is being paid for supplying the Network by EM24, not You, and may cancel Your access to the Network for nonpayment by EM24, at the end of AlarmNet's contract with EM24, or at the request of EM24. You understand that the Equipment used to communicate with the Network is unique and may not be suitable for use with any other system if You no longer use the Network. The Parties recognize that certain components of the Networks may be provided by independent Network Service Providers ("NSP"), such as Cingular Interactive, L.P. (a Delaware limited partnership) and Acris Communications, Inc. (a California corporation), and independent Internet Service Providers ("ISP") who are beyond the control of AlarmNet. The parties therefore agree that AlarmNet shall not be liable for damages, whether direct or consequential, which might arise from disruption or cancellation of such services.

3. Periodic Testing by You. Ademco takes pride in manufacturing high quality alarm Equipment, and extends its Limited Warranty, reprinted below, to You. All alarm Equipment is subject to compromise or failure to warn for a wide variety of reasons. You agree to arrange with EM24 or Installer to test the alarm system on a regular basis to assure that its many sophisticated and sensitive components are in good working order, and to take appropriate action if any component fails to function properly during a periodic test.

4. No Guarantee. EVEN IF THE ALARM EQUIPMENT IS TESTED REGULARLY AND THE COMPONENTS ARE OPERATING IN ACCORDANCE WITH SPECIFICATIONS, THERE CAN BE NO GUARANTEE THAT IT WILL NOT BE COMPROMISED OR CIRCUMVENTED BEFORE IT COMMUNICATES WITH THE CENTRAL STATION, OR THAT IT WILL PROVIDE ADEQUATE WARNING IN ANY GIVEN SITUATION, OR THAT IT WILL PREVENT ANY PERSONAL INJURY OR PROPERTY LOSS BY BURGLARY, ROBBERY, FIRE OR OTHERWISE. Even with the extra protection of the Network, due to the very nature of radio waves and other communications technologies, there may be times when the Network is unable to maintain contact with subscriber Equipment or re-transmit a message. It is recommended that AlarmNet subscriber communications Equipment be configured with secondary communications means, such as a digital dialer. You understand that properly installed and maintained alarm equipment (including the subscriber transmitter), may only reduce the risk of a burglary, robbery, fire or otherwise occurring without providing an alarm, but it is not insurance or a guaranty that such will not occur or that there will be no personal injury or property loss as a result. CONSEQUENTLY, ADEMCO AND ALARMNET SHALL HAVE NO LIABILITY FOR ANY PERSONAL INJURY, PROPOERTY DAMAGE OR ANY OTHER LOSS BASED ON A CLAIM THAT THE EQUIPMENT FAILED TO GIVE WARNING. For all these reasons, You are responsible for maintaining appropriate caution, and insuring life and property with the types and amounts of insurance You deem appropriate.

The terms and conditions of this agreement, including certain limitations of liability and warranty continue on the second page and are an integral part of this agreement. Please read them carefully before signing.

GARDINER
5300 Bainbridge Road
Solon, OH 44139
p (440) 248-3400
f (440) 349-6980
www.whgardiner.com

EXHIBIT VII.A.7

GARDINER

X

PlasmaAir

FACTORY AUTHORIZED REPRESENTATIVE OF DAIKIN

GARDINER / PLASMA AIR INFORMATION GUIDE

PLASMA AIR TECHNOLOGY

Bi-Polar Ionization technology is a highly effective way to combat COVID-19. When utilizing the products from *Plasma Air*, positive & negative charged oxygen ions are dispersed into the airstream with virtually no ozone created in the process. Once these particles are taken into the HVAC system, they bond with bacteria and virus cells, neutralizing and destroying the harmful contaminants, odorous gases & Volatile Organic Compounds (VOCs). A test was conducted with *Plasma Air's* technology against the spread of the coronavirus. The resulting outcome came out to a **99% reduction after ten minutes of exposure to ionization**. You can find the document regarding this procedure & further information on this technology attached.

600 Series

7000 Series

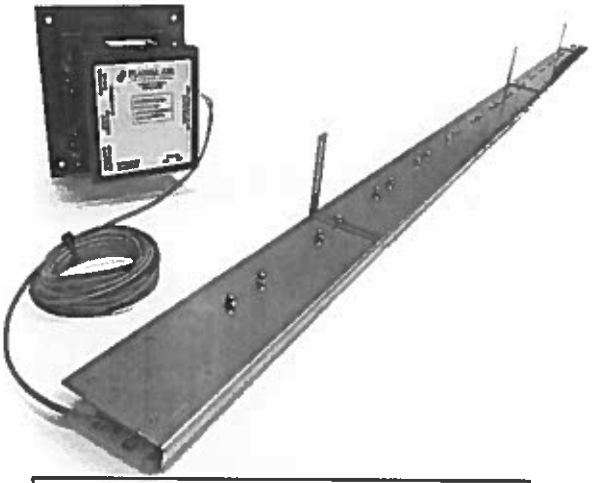

Plasma Bar

GARDINER / PLASMA AIR INFORMATION GUIDE

CLEARING THE AIR WITH PLASMA AIR : FREQUENTLY ASKED QUESTIONS

What sets Plasma Air apart from the competition?

Plasma Air's needlepoint bi-polar ionization technology is some of the most advanced technology in this spectrum of Indoor Air Quality (IAQ). Some manufacturers utilize one needle for positive ions and the other for negative ions. This can cause issues due to the opposite polarities dispensing from the product attracting to each other instead of linking to VOCs and other viruses in the airstream. Plasma Air's products do not run into this issue, as they produce both polarities at the same time. This allows the positive & negative oxygen ions to repel instead of attract & attach to the harmful contaminants in your airstream (Figure 1).

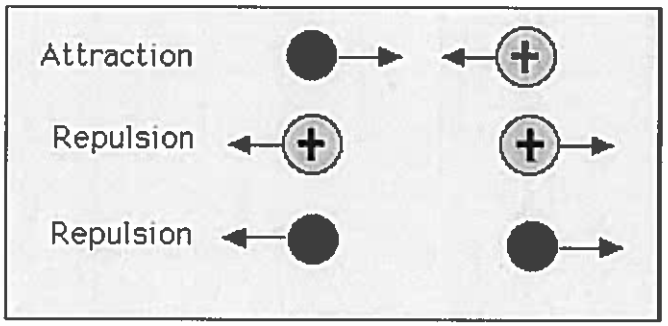

Figure #1: Ion Attraction/Repulsion Visual

Is there any extra work required prior to installation?

Plasma Air's products are fully assembled in the factory with no extra labor required prior to installation. No extra pieces to attach or mount together.

What does maintenance & lifespan look like for Plasma Air's products?

With a 10 year lifespan, Plasma Air's technology will last a decade with no maintenance required.

Does this technology create ozone?

Plasma Air's products are certified by the Underwriters Laboratory (UL). The products are UL 867 / UL 2998 certified. This means that Plasma Air's technology produces less than 5 ppb (parts per billion). Achieving this requirement meets the definition of zero ozone emissions as defined by UL.

PlasmaAir

Commercial Product Selection Guide

Plasma Air products can be used in a variety of IAQ applications with varying pollutant levels. This guide will help you select the proper Plasma Air product and concentration of ionization for your application.

Needlepoint and Brush Style Ionizers

600 Brush-style Needlepoint Ionizer

7000 Series Needlepoint Ionizer

Plasma Bar (PB) Needlepoint Ionizer

POLLUTANT LOAD FACTOR

A Office, Classroom, Library, Church, Day Care Center
B Gymnasium, Auditorium, Arena, Athletic Facility, Cafeteria, Hospital
C Cannabis Grow Facility, Senior Living, Airport, Non-Smoking Casino, Train Station
D Light Manufacturing, Animal Facility, Smoking Casino, Nail/Beauty Salon, Food Processing Facility
E Industrial Facility, Heavy Manufacturing, Garbage Room
F Odors and Chemicals Typical of a Waste Water Treatment Facility

The table below provides recommended products based on airflow (CFM) and typical pollutant loads:

Pollutant Load Factor	Airflow (CFM) & Recommended Product(s)						
	1,000	2,000	3,000	5,000	8,000	10,000	20,000
A	600 or 7100	600 or 7200	7300	7400	(2)7300 or PB-42	(2)7400 or PB-48	(4)7400 or PB-96
B	600, 7200 or 100D	7300 or 100E	7400 or 200D	(2)7300 or 200E	(2)7400, PB-60 or 50E	(3)7400, PB-72 or 50F	(2)PB-72 or (2)50F
C	100D	100E	200E	50E	50F	(2)50E	(3)50F
D	100E	200E	50E	50F	(2)50E	(2)50F	(4)50F
E	200D	50E	50F	(2)50E	(2)50F	(3)50F	(6)50F
F	* Consult Plasma Air Engineering Department						

PLASMA AIR 35 MELROSE PLACE, STAMFORD, CT 06902
203-662-0800 www.plasma-air.com info@plasma-air.com

PA-US-COM-BRO-001-REV1

PlasmaAir

Plasma Air Ionization Proven to Reduce Coronavirus Surrogate by 99% Airborne and 80% on Surfaces in 10 Minutes

POSTED IN CASINOS, COMMERCIAL, CORONAVIRUS, HOTELS, RESIDENTIAL, SCHOOLS, UNCATEGORIZED.

Successful certified testing conducted in a building facility proves virus destroying power

Testing carried out by Tayra and backed by the Spanish Ministry of Defense Biological Laboratory in Spain has proven the effectiveness of Plasma Air Ionization technology in the reduction of MS2 Bacteriophage, a surrogate for SARS-CoV-2 (COVID-19), in indoor environments.

There is mounting research to suggest that clean, disinfected air plays a vital role in preventing the spread of SARS-CoV-2, the virus causing COVID-19. While respiratory droplets are considered the primary transmission route, aerosols are being considered by many health authorities as a possible mode of infection transmission along with surface contact. This suggests that viral particles can remain suspended in the air for long periods and can be inhaled.

The research tests were conducted in a Madrid hotel converted into a residence and confinement center for medical staff during the pandemic. The experiments took place in simulated ICU hospital rooms within the hotel. This environment was explicitly designed to test air ionization on small aerosolized viral particles. The laboratory analysis was carried out at a nearby operations center of the Spanish Ministry of Defense from May 4th to May 14th.

The Plasma Air ionizer was chosen to suit the specific airflow and installed in the fan coil unit supply air duct that delivered air to the test space. The bacteriophage MS2 was then nebulized into the test space. During the first phase of the test, the supply air into the room was untreated. During the second phase, the supply air entering the test room was ionized using Plasma Air's bipolar ionization system. A reduction of approximately 2 log units of the bacteriophage was obtained in the air that was ionized by the Plasma Air system. This corresponds to a **99% reduction after only 10 minutes** of exposure to ionization.

The tests also included using manikins to simulate ICU patients. The manikins were equipped with specialized filters to measure the amount of bacteriophage that was being breathed in with and without air ionization. The levels of MS2 bacteriophage and associated particle counts were measured using Electrical Low-Pressure Impactors, and swabs were taken from walls and surfaces for analysis. The level of airborne MS2 bacteriophage was measured using the Spanish authorities' calibrated equipment for detecting biothreats. Results from this test showed a reduction in the order of 0.70-0.85 log pfu/cm2 corresponding to nearly **80% reduction in surface MS2 bacteriophage after 10 minutes** between the test with and without ionization.

The research project was guided and coordinated by Plasma Air's long-term business and technical partner in Spain, Tayra, a specialist in air purification. In addition to the Spanish Government ministries, the experiments also involved academics in the fields of engineering, microbiology, and computational fluid dynamics, along with Spanish Government appointed testing labs.

"Coronavirus is a global crisis and nowhere more so than inside built environments such as transport hubs and work environments," explains Chris Russell, Vice President of Plasma Air. "The effective elimination of airborne virus is a major breakthrough that can make workplaces, transport, entertainment and educational facilities safer for employees, commuters and students."

"We were very motivated to facilitate these critical tests at our laboratories here in Madrid, and we are extremely impressed by the results achieved," stated Lieutenant Coronal Juan Carlos Cabria, the Technical Director of the biosecurity laboratories of the Ministry of Defense. "We are extremely grateful to the team of Scientists, Engineers, Microbiologists and Academics who have worked tirelessly here for the last three weeks voluntarily to achieve this incredible and important result in the battle against coronavirus."

About Air Ionization

Air ionization works through the reaction of negatively and positively charged ions. The ions attach to airborne pathogens, such as viruses causing a chemical reaction on the cell membrane's surface. This deactivates the viruses, rendering them harmless, so they can no longer spread or cause infection.

Plasma Air's ionization system used during the Spanish trials are available commercially on a worldwide basis from a network of distributors and are used in offices, hotels, transport hubs, schools and hospitals, as well as in the Los Angeles Airport (LAX) and the new Doha and Riyadh metro systems.

About Plasma Air

Plasma Air is the leading innovator in indoor air quality by manufacturing HVAC and air purification products that result in healthier, more productive indoor environments in institutional, commercial, residential and industrial applications. The Plasma Air HVAC purification systems use highly efficient bipolar ionization technology to kill harmful airborne viruses and neutralize indoor air pollutants. Plasma Air systems have been proven in thousands of applications to provide the highest level of air quality improvement for airports, train systems, schools, hotels, casinos, arenas, offices and homes.

About Tayra

Tayra is a specialist HVAC company based in Madrid. Founded in 2004, it provides advanced technologies and products to the market. Tayra's technical team brings together more than 30 years of experience in the field of air conditioning installations, both in the design and application of advanced systems of high performance and quality. Tayra has been working closely with Plasma Air and has been successfully deploying ionization to major companies such as Engie and Danone in the region.

<PREVIOUS

PlasmaAir

Sars-Cov-2 (COVID-19) Testing

July 2020 Report #1

Criteria	***Plasma Air Independent Test on Sars-Cov-2 Surrogate***
Independent Test?	Testing conducted and certified by the Minister of Defense of the Spanish Government*
Test Set up	Full scale hotel/hospital room
Sample Delivery	Aerosolized virus throughout space
Ion Density	Testing performed at a representative ion level of 1,000 ions/cm3
Ion Delivery Rate	Normal 50 FPM in occupied space
Model Tested	Testing performed on current Plasma Air model – PA600 
Results – Airborne	99% deactivation rate in 10 min
Results – Surface	80% deactivation rate in 10 min

*Details of the independent test can be found in the news section of our website.

Plasma Air is the leader in third party independent efficacy testing. We also lead the ionization industry in internal testing with an in-house state of the art microbiology lab and three certified test chambers.

35 MELROSE PLACE, STAMFORD, CT 06902
203-662-0800 203-662-0808 www.plasma-air.com info@plasma-air.com

EXHIBIT VII.A.8

OHIO AUDITOR OF STATE
KEITH FABER

Lausche Building, 12th Floor
615 Superior Avenue, NW
Cleveland, Ohio 44113-1801
(216) 787-3665 or (800) 626-2297
NortheastRegion@ohioauditor.gov

September 22, 2020

Mary Ann Nowak, Treasurer/CFO
Clearview Local School District

This letter of arrangement between the Clearview Local School District (the District) and the Auditor of State describes the objective and scope of the services we will provide, the District's required involvement and assistance in support of our services, the related fee arrangements, and other terms and conditions designed to ensure that our professional services satisfy the District's audit requirements.

Summary of Services
We will audit the District's basic financial statements as of and for the year ended June 30, 2020. We are pleased to confirm our acceptance and our understanding of this audit engagement by means of this letter. The objective of an audit is to express our opinion concerning whether the basic financial statements and related notes present fairly, in all material respects, the District's cash receipts, disbursements and balances in accordance with the District's accounting basis.

We will audit to form an opinion on the financial statements. We will also opine on whether the Schedule of Expenditures of Federal Awards is fairly presented, in all material respects, in relation to the financial statements taken as a whole.

We expect to deliver our report on or about March 31, 2020.

We will read other information such as the *Management's Discussion and Analysis*, in order to identify material inconsistencies, if any, with the audited financial statements.

Engagement Team

The engagement will be led by:

* William Ward, CPA, Assistant Chief Auditor, who will be responsible for assuring the overall quality, value, and timeliness of our services to you;

* Brian McQuinn, Senior Audit Manager, who will be responsible for managing the delivery of our services to you; and

* Kimberly A. Stevens, Audit Manager, who will be responsible for on-site administration of our services to you.

The Auditing Process

Our Responsibilities:

The *Summary of Services* above describes our responsibilities for the District's basic financial statements.

We will conduct our audit in accordance with U.S. generally accepted auditing standards (GAAS) and the Comptroller General of the United States' standards for financial audits in *Government Auditing Standards*, the Single Audit Act Amendments of 1996, *and Title 2 U.S. Code of Federal Regulations (CFR) Part 200, Uniform Administrative Requirements, Cost Principles, and Audit Requirements for Federal Awards (Uniform Guidance).* Those standards require that we plan and perform the audit to reasonably assure that the financial statements are free of material misstatement.

Because of inherent limitations of an audit, together with the inherent limitations of internal control, an unavoidable risk that some material misstatement may not be detected exists, even though the audit is properly planned and performed in accordance with GAAS.

We may limit certain procedures to selective testing of data. Therefore we might not detect material error and fraud if it exists. It is not cost-efficient to design procedures to detect immaterial error or immaterial fraud. Also, because of the characteristics of fraud, including attempts at concealment through collusion and forgery, a properly designed and executed audit may not detect a material fraud.

We will communicate all instances where we believe fraud *may* exist to you. These would include instances where we:

- Have persuasive evidence that fraud occurred.
- Determined fraud risks exist and were unable to obtain convincing evidence to determine that fraud was unlikely.

Similarly, noncompliance may have occurred. However, our audit provides no assurance that noncompliance generally will be detected and only reasonable assurance that we will detect noncompliance directly and materially affecting the determination of financial statement amounts. We will inform you regarding material error or noncompliance that come to our attention.

Our evaluation of internal control may provide evidence of waste or abuse. Because the determination of waste and abuse is subjective, we are not required to perform specific procedures to detect waste or abuse. If we detect waste or abuse, we will determine whether and how to communicate such matters.

If for any reason we are unable to complete the audit or are unable to form an opinion, we may disclaim an opinion on your financial statements. In this unlikely event, we will communicate the reason for disclaiming an opinion to you, and to those charged with governance, in writing.

Your Responsibilities and Identification of the Applicable Reporting Framework:

We will audit assuming management and those charged with governance acknowledge and understand they are responsible for:

1. Preparing the financial statements and other financial information, including related disclosures and selecting and applying accounting principles in accordance with the District's accounting basis. This includes compliance with Ohio Admin. Code § 117-2-01 which requires designing, implementing and maintaining internal controls relevant to preparing and fairly presenting financial statements free from material misstatement whether due to fraud or error.

2. Providing us with:
    a. Access to all information of which management is aware that is relevant to preparing and fairly presenting the financial statements such as records, documentation, and other matters;

b. Additional information that we may request from management for the audit; and
c. Unrestricted access to persons within the District from whom we determine it necessary to obtain audit evidence.

3. Inform us of events occurring or facts discovered subsequent to the date of the financial statements, of which management may become aware, that may affect the financial statements.

4. Preparing supplementary information (including the Schedule of Expenditures of Federal Awards) in accordance with the applicable criteria.

   a. Include our report on the supplementary information in any document that includes the supplementary information and that indicates that the auditor has reported on this supplementary information.

   b. Present the supplementary information with the audited financial statements or, if the supplementary information will not be presented with the audited financial statements, to make the audited financial statements readily available to the intended users of the supplementary information no later than the date of issuance by the District of the supplementary information and the auditor's report thereon.

5. Reporting fraud and noncompliance of which you are aware to us.

6. Making available to the auditor draft financial statements and any accompanying other information in time to allow the auditor to complete the audit in accordance with the proposed timeline.

7. Reviewing drafts of the audited financial statements, footnotes, any supplemental information, auditor's reports and any findings; and informing us of any edits you believe may be necessary.

8. Designing and implementing programs and controls to prevent and detect fraud.

You should not rely on our audit as your primary means of detecting fraud.

Compliance with Laws and Regulations

Our Responsibilities

As part of reasonably assuring whether the financial statements are free of material misstatement, we will test the District's compliance with certain provisions of laws, regulations, contracts, and grants if noncompliance might reasonably directly and materially affect the financial statements. However, except for major federal financial assistance programs, our objective is not to opine on overall compliance with these provisions.

Your Responsibilities:

Management and those charged with governance are responsible for:

1. Being knowledgeable of, and complying with, laws, regulations, contracts, and grants applicable to the District.

2. Identifying for us other financial audits, attestation engagements, performance audits, internal audits· reports from regulators or other studies related to the District (if any), and the corrective actions taken to address these audits' significant findings and recommendations.

3. Tracking the status of prior audit findings.

4. Taking timely and appropriate steps to remedy fraud, noncompliance, violations of provisions of laws, regulations, contracts or grant agreements, or abuse we may report.

5. Providing your views and planned corrective action on audit findings we may report.

Internal Control

Our Responsibilities:

As a part of our audit, we will obtain an understanding of your District and its environment, including its internal control, sufficient to assess the risks of material misstatement of the financial statements and to design the nature, timing, and extent of further audit procedures. An audit is not designed to provide assurance on internal control or to identify significant deficiencies or material weaknesses.

In assessing risk , we consider internal control relevant to the District's preparation and fair presentation of the financial statements in order to design audit procedures that are appropriate in the circumstances but not for the purpose of opining on the effectiveness of the District's internal control. However, we will communicate to you in writing any significant deficiencies or material weaknesses in internal control relevant to the audit of the financial statements that we have identified during the audit.

Your Responsibilities:

Design, implement and maintain internal control relevant to compliance and the preparing and fairly presenting financial statements that are free from material misstatement, whether due to fraud or error. Appropriate supervisory reviews are necessary to reasonably assure that adopted policies and prescribed procedures are followed.

Your Responsibility for Service Organizations:

Service organizations are other governmental entities, organizations or companies that provide services to you, as the user entity, relevant to your internal controls over financial reporting. Service organizations process transactions reflected in your District's financial statements, and therefore fall within the scope of our audit. While service organizations are responsible for establishing and maintaining their internal control, you are responsible for being aware of the service organizations your District uses, and for establishing controls to monitor the service organization's performance. Because the complexity of service organization transaction processing can vary considerably, your monitoring activities can vary accordingly.

When transaction processing is complex and the volume of transactions is relatively high, obtaining and reviewing a service organization auditor's *Independent Service Auditor's Report on Management's Description of a Service Organization's System and the Suitability of the Design and Operating Effectiveness of Controls* Report (Type 2 Service Organization Control Report (SOC 1)) may be the most effective method of meeting your responsibility to monitor a service organization, and may also be the only efficient means by which we can obtain sufficient evidence regarding their internal controls. AT Section 801, *Reporting on Controls at a Service Organization* for service organization reports dated prior to May 1, 2017 and AT-C Section 320, *Reporting on an Examination of Controls at a Service Organization Relevant to User Entities' Internal Control Over Financial Reporting* for service organization reports dated on or after May 1, 2017 discuss the aforementioned report. (In some circumstances, we can accept a suitably-designed agreed-upon procedures report (AUP) in lieu of a SOC 1 report.)

You are responsible for informing our staff of the service organizations your District uses, and for monitoring these service organizations' performance.

Service organizations of which we are aware are:

- META, which provides your District's accounting software.
- Lorain County Auditor, which assesses, bills, collect and remits your District's property taxes.

Please confirm to us that, to the best of your knowledge, the above listing is complete.

Of the service organizations above, those for which we believe the complexity of processing and volume of transactions warrant a SOC 1 (or AUP) report are:

- META, which processes accounting transactions on your District's behalf.

Without an acceptable SOC 1 or AUP report for the above-listed organizations, generally accepted auditing standards may require us to qualify our opinion on your District's financial statements due to an insufficiency of audit evidence regarding service organization transactions included in your District's financial statements. You are responsible for communicating the need for a SOC 1 or AUP report to these service organizations.

Because the Auditor of State performs the attestation engagement for META, you need not contact us regarding your deadline. However, you should read our most recent META report as part of your monitoring activities.

Additional Responsibilities and Reporting Under the Uniform Guidance

Our Responsibilities:

For grant funding subject to the Uniform Guidance, as the Guidance requires, we will test controls over compliance to evaluate the effectiveness of the design and operation of controls that we consider relevant to preventing or detecting material noncompliance with compliance requirements applicable to each major federal award program. However, our tests will be less in scope than would be necessary to opine on those controls and, accordingly, no opinion will be expressed in our report on internal control issued pursuant to the Uniform Guidance.

Additionally, the Uniform Guidance requires that we also plan and perform the audit to reasonably assure whether the auditee has complied with applicable federal statutes, regulations, and terms and conditions of federal awards applicable to major programs. Our procedures will consist of tests of transactions and other applicable procedures described in the OMB *Compliance Supplement* for the types of compliance requirements that could directly and materially affect each of your major programs.

In accordance with the Uniform Guidance, we will prepare the following report:

> *Independent Auditor's Report on Compliance with Requirements Applicable To the Major Federal Program and on Internal Control Over Compliance Required by the Uniform Guidance*
>
> Our report on compliance will include our opinion on compliance with major federal financial assistance programs and also describe instances of noncompliance with Federal requirements we detect that require reporting per the Uniform Guidance. This report will also describe any significant deficiencies and /or material weaknesses we identify relating to controls used to administer Federal award programs. However, this report will not opine on internal control used to administer Federal award programs.

We are also responsible for completing certain parts of OMB Form SF-SAC (the Data Collection Form).

Your Responsibilities:
You are responsible for identifying federal statutes, regulations and the terms and conditions relating to Federal award programs, and for complying with them. You are responsible for compiling the Schedule of Expenditures of Federal Awards and accompanying notes.

For grant funding subject to the Uniform Guidance, you are required to establish and maintain effective internal controls to reasonably assure compliance with federal statutes, regulations and terms and conditions of federal awards and controls relating to preparing the Schedule of Expenditures of Federal Awards. Additionally, you are responsible for evaluating and monitoring noncompliance with federal statutes, regulations, and the terms and conditions of federal awards; taking prompt action when instances of noncompliance are identified including noncompliance identified in audit findings; promptly following up and taking corrective action on reported audit findings; and for preparing a summary of schedule of prior audit findings and a separate corrective action plan.

You are responsible for informing us of significant subrecipient relationships and contractor relationships (previously known as vendor relationships), when the contractor has responsibility for program compliance and for the accuracy and completeness of that information.

You are responsible for completing your District's Data Collection Form and assuring the reporting package (including the Data Collection Form) is filed in accordance with the electronic submission requirements.

You are responsible for providing electronic files that are unlocked, unencrypted and in an 85% text searchable PDF format for your District's single audit submission of the reporting package to the Federal Audit Clearinghouse.

Representations from Management
Your Responsibilities
Upon concluding our engagement, management and, when appropriate, those charged with governance will provide to us written representations about the audit that, among other things, will confirm, to the best of their knowledge and belief:

- Management's responsibility for preparing the financial statements in conformity with the District's accounting basis, and the Schedule of Expenditures of Federal Awards in conformity with the Uniform Guidance;
- The availability of original financial records and related data, the completeness and availability of all minutes of the legislative or other bodies and committee meetings;
- Management's responsibility for the District's compliance with laws and regulations;
- The identification and disclosure to the auditor of all laws, regulations, and provisions of contracts and grant agreements directly and materially affecting the determination of financial statement amounts and;
- The absence of fraud involving management or employees with significant roles in internal control.

Additionally, we will request representations, as applicable, regarding:

- The inclusion of all components, and the disclosure of all joint ventures and other related organizations;
- The proper classification of funds and fund balances;
- The proper approval of reserves of fund equity;
- Compliance with laws, regulations, and provisions of contracts and grant agreements, including budget laws or ordinances; compliance with any tax or debt limits, and any debt covenants;
- The identification of all federal assistance programs, and compliance with grant requirements.
- Events occurring subsequent to the fiscal year end requiring adjustment to or disclosure in the financial statements or Schedule of Expenditures of Federal Awards.

Management is responsible for adjusting the financial statements to correct misstatements we may detect during our audit and for affirming to us in the representation letter that the effects of any uncorrected misstatements we aggregate during our engagement and pertaining to the latest period the statements present are immaterial, both individually and in the aggregate, to the opinion units. (*Financial statements* include the related footnotes and required and other supplemental information).

Communication

Our Responsibilities

As part of this engagement the Auditor of State will communicate certain additional matters (if applicable) to the appropriate members of management and to those charged with governance. These matters include:

- The initial selection of and changes in significant accounting policies and their application;
- The process management uses to formulate particularly sensitive accounting estimates and the basis for their conclusions regarding the reasonableness of those estimates;
- Audit adjustments, whether posted or waived;
- Any disagreements with management, whether or not satisfactorily resolved, about matters that individually or in the aggregate could be significant to the financial statements or our opinion;
- Our views about matters that were the subject of management's consultation with other accountants about auditing and accounting matters;
- Major issues that were discussed with management related to retaining our services, including, among other matters, any discussions regarding the application of accounting principles and auditing standards; and
- Serious difficulties we encountered in dealing with management during the audit.

We will present those charged with governance our Summary of Identified Misstatements (if any) at the conclusion of our audit.

Terms and Conditions Supporting Fee

As a result of our planning process, the District and the Auditor of State have agreed to an approach designed to meet the District's objectives for an agreed-upon fee, subject to the following conditions.

Our Responsibilities:

In providing our services, we will consult with the District regarding matters of accounting, financial reporting or other significant business issues. Accordingly, our fee includes estimated time necessary for this consultation. Circumstances may require the Auditor of State to confirm balances with your financial institution resulting in additional nominal charges which will not require an amendment to this agreement. However, should a matter require research, consultation or audit work beyond this estimate, the Auditor of State and the District will agree to an appropriate revision in services and fee. These revisions will also be set forth in the form of the attached Amendment *to Letter of Arrangement.*

Your Responsibilities:

The District will provide in a timely manner all financial records and related information to us, an initial list of which will be furnished to you, including timely communication of all significant accounting and financial reporting matters, as well as working space and clerical assistance as mutually agreed upon and as is normal and reasonable in the circumstances. When and if for any reason the District is unable to provide these schedules, information and assistance, the Auditor of State and the District will mutually revise the fee to reflect additional services, if any, we require to achieve these objectives. These revisions will be set forth in the form of the attached *Amendment to Letter of Arrangement.*

Confidential Information:
You should make every attempt to minimize or eliminate the transmission of personal information to the Auditor of State (AOS). All documents you provide to the AOS in connection with our services including financial records and reports, payroll records, employee rosters, health and medical records, tax records, etc. should be redacted of any personal information. Personal information includes social security numbers, date of birth, drivers' license numbers or financial institution account numbers associated with an individual. The public office should redact all personal information from electronic records before they are transmitted to the AOS. This information should be fully blacked out in all paper documents prior to sending to the AOS. If personal information cannot be redacted from any records or documents; the public office must identify these records to the AOS.

If redacting this personal information compromises the audit or the ability to prepare financial statements, the public office and the AOS will consider these exceptions on a case-by-case basis. Additionally, if redacting this information creates a hardship on the public office in terms of resources, recordkeeping or other issues, the public office and the AOS may collaborate on alternative methods of providing the public office's data to the AOS without compromising the personal information of individuals served by the public office. The AOS is willing to work with the public office and it is our intent to greatly reduce the amount of personal information submitted to the AOS for audit or financial statement preparation purposes. It is important that the public office review internal policies to find ways to eliminate as much personal information from financial records as possible by substituting non-personal information (i.e., change social security numbers to employee identification numbers).

Fee
Except for any changes in fees and expenses which may result from the circumstances described above, we expect our fees and expenses for our audit services will not exceed $16,523.

Pursuant to Ohio Rev. Code Section 117.13, you may charge all of this audit's cost to the general fund or you may allocate the cost among the general fund and other eligible funds.

Reporting
We will issue a written report upon completing our audit of your financial statements. We will address our report to those charged with governance. We cannot assure you that we will issue an unmodified opinion. Circumstances may arise in which it is necessary for us to modify our opinion, add an 'other matter' or emphasis-of-matter paragraph, or withdraw from the engagement.

Upon completing our audit, we will also issue a written report in accordance with Government Auditing Standards on internal control over financial reporting and our tests of its compliance with certain provisions of laws, regulations, contracts and grant agreements and other matters.

Access to Our Reports and Working Papers
AU-C 905—*Alert That Restricts the Use of the Auditor's Written Communication,* requires our reports to disclose the following:

Independent Auditor's Report on Internal Control Over Financial Reporting and on Compliance and Other Matters Required by Government Auditing Standards:

> This report only describes the scope of our internal control and compliance testing and our testing results, and does not opine on the effectiveness of the District's internal control or on compliance. This report is an integral part of an audit performed under *Government Auditing Standards* in considering the District's internal control and compliance. Accordingly, this report is not suitable for any other purpose.

Independent Auditor's Report on Compliance with Requirements Applicable to the Major Federal Program and on Internal Control Over Compliance Required by the Uniform Guidance:

> This report only describes the scope of our internal control compliance tests and the results of this testing based on Uniform Guidance requirements. Accordingly, this report is not suitable for any other purpose.

AU-C 905 requires us to include this restrictive language in our reports due to concerns that other readers may not fully understand the purpose of the report, the nature of the procedures applied in its preparation, the basis or assumptions used in its preparation, the extent to which the procedures performed are generally known or understood, and the potential for the report to be misunderstood, when taken out of the context for which it was intended.

However, under Revised Code Section 117.26, an audit report becomes a public record under Section 149.43, Revised Code, when we file copies of the report with the public officers enumerated in the Revised Code. When we file the reports, our working papers become available to the public upon request, subject to information protected for criminal investigations, by attorney-client privilege or by local, state or federal law. AU-C 905 does not affect public access to our reports or working papers.

Under generally accepted auditing standards, we must retain working papers for five years after the release date of our opinion. However, AOS policy requires we retain working papers for seven years or longer, as needed.

Peer Review Report
As required by *Government Auditing Standards*, we have made our most recent external quality control review report (Peer Review) publicly available, at https://www.ohioauditor.gov/publications/Peer_Opinion_2018.pdf. Audit organizations can receive a rating of *pass, pass with deficiency(ies), or fail*. The Auditor of State received a peer review rating of pass.

Please sign and return this letter to indicate your acknowledgement of, and agreement with, the arrangements for our audit of the financial statements including our respective responsibilities. If you have any questions, please call Brian McQuinn at 216-787-3665.

Sincerely,

KEITH FABER
Auditor of State

William Ward

Digitally signed by
William J. Ward
Date: 2020.09.22
14:30:48 -04'00'

William Ward, CPA
Assistant Chief Auditor, Northeast Region

Attachment

cc: Superintendent
Board of Education

ACCEPTED BY

DATE

TITLE

2 CFR Part 200 REPORTING PACKAGE

2CFR Part 200 Ref.	Item	Responsibility	
		Auditee	Auditor
.508(b); .510(a)	Financial Statements	✓	
.515(a)	Report (opinion) on financial statements		✓
. 508(b); .510(b)	Schedule of Expenditures of Federal Awards	✓	
.515(a)	Report ("in-relation-to" opinion) on Schedule of Expenditures of Federal Awards		✓
.515(b)	Report on Compliance and Internal Controls - Financial Statements		✓
.515(c)	Report on Compliance and Internal Controls - (Major) Federal Awards		✓
.515(d)	Schedule of Findings and Questioned Costs[1]		✓
.508(c); .511(a),(b)	Schedule of Prior Audit Findings[2]	✓	
.512(a), (b)	Data Collection Form[3]	✓	✓
.511(c)	Corrective Action Plan[4]	✓	

[1] Required in all cases

[2] Required in all cases

[3] You may only submit the reporting package and Data Collection Form electronically. The reporting package will be uploaded and will be submitted along with the Data Collection Form. The Federal Audit Clearinghouse will distribute the required reporting packages to the Federal agencies per Section __.512(g) of the Uniform Guidance, if the audit requires distribution to a Federal-funding agency. Complete the auditee certification process and submit the single audit reporting package and the Data Collection Form electronically to the Federal Audit Clearinghouse within the earlier of 30 days after receipt of our reports or nine months after the end of the audit period.

[4] Required for any GAGAS level or UG findings

SAMPLE
AMENDMENT #___ TO LETTER OF ARRANGEMENT

[Date]

[ENGAGEMENT LETTER ADDRESSEE]

Dear _____:

The letter of arrangement dated _____ between the Auditor of State and the District is hereby amended to reflect the following:

Description of / Causes for Amendment	Estimated Fee Effect
1	
2	
3	
4	
Total this amendment	$0.00
Previous fee estimate	
Revised fee estimate	$0.00

Please sign the copy of this letter in the space provided and return it to us. If you should have any questions, please call _____at _____.

Sincerely,

KEITH FABER
Auditor of State

[NAME OF CHIEF AUDITOR]
Chief Auditor, [NAME] Region

cc: [Engagement Letter cc's]

_____ _____
ACCEPTED BY DATE

_____
TITLE

The following contract document(s) and the information contained therein constitute confidential information of American Express ("Confidential Information"). By viewing, reading, evaluating and/or considering this contract document, you acknowledge and agree on behalf of your company ("Company") to comply with the following confidentiality obligations (the "Obligations"):

- Without first obtaining prior written consent of American Express, Company will not disclose the Confidential Information to any third party, except that Company may only disclose Confidential Information to those of its employees and agents that require such material to evaluate the contract document(s), and for no other purpose.
- In the event of a breach or threatened breach of the Obligations by Company, Company will promptly give notice thereof to American Express and will take all reasonable steps to enforce the Obligations. American Express reserves all of its rights and remedies at law and in equity in connection with any such breach or threatened breach.
- Company will indemnify American Express for all losses or damages incurred by American Express resulting from or related to Company's breach of the Obligations.

Promptly upon American Express' request, Company agrees either to return or destroy the originals (and all copies) of such contract documents received by Company.

Agreement Number: 00195305.0

CORPORATE SERVICES COMMERCIAL ACCOUNT AGREEMENT

This Corporate Services Commercial Account Agreement (this "Agreement") is between **AMERICAN EXPRESS TRAVEL RELATED SERVICES COMPANY, INC.** ("Amex") and **CLEARVIEW LOCAL SCHOOLS** ("Company"). This Agreement governs Company's use of the payment accounts and cards provided by Amex or an Amex Affiliate to Company, its Affiliates and/or their respective Employees for the purposes of facilitating and expediting the purchase of and payment for goods and services acquired for legitimate business purposes (each, an "Amex Account"). By signing this Agreement, Company agrees to be bound by the general provisions of this Agreement set forth in Section A below ("General Provisions") and the terms applicable to the Amex Account(s) set forth in Section B below ("Account Provisions"). The General Provisions shall apply to all Amex Account(s) and the Account Provisions shall apply to the specific Amex Accounts to which they relate; *provided* that if any General Provision is inconsistent with any Account Provision relating to a specific Amex Account, then such Account Provision shall govern with respect to such Amex Account.

The parties, intending to be legally bound, agree as follows:

Amex Accounts. The Company may request any of the following Amex Accounts under this Agreement:

- Corporate Card Account
- Business Travel Account (Virtual)
- Car Rental Business Travel Account
- Corporate Purchasing Card Account
  - Buyer Initiated Payments (BIP)
- Corporate Meeting Card
- vPayment Account

Following the execution of this Agreement, Company and Amex may, upon mutual agreement, amend the above-referenced list of Amex Accounts.

A. GENERAL PROVISIONS

1. ACCOUNT ESTABLISHMENT AND OPERATION

Subject to the terms hereof, and prior financial, risk management and compliance approvals, Amex agrees to establish in Company's name in the United States the Amex Accounts selected by Company in writing. Amex or its Affiliate will issue such Amex Accounts in the United States, as applicable, to Company and/or Company's Employees who are approved by Amex and/or its Affiliate and are designated and authorized by Company to incur legitimate business expenses on behalf of Company in accordance with the business expense policies of Company. Company acknowledges that it has the authority to provide any information relating to the establishment and issuance of the Amex Accounts and to request the renewal of Amex Accounts for its Employees.

1.1 Accounts for Affiliates

Upon the request of Company as approved by Amex, Amex will establish Amex Accounts for and in the name of Company's Affiliates; *provided* that such Affiliates agree to be bound by this Agreement. *"Affiliate"* means any entity that controls, is controlled by, or is under common control with either party, including its subsidiaries. As used in the definition of Affiliate, "control" means the possession, directly or indirectly, of the power to direct or cause the direction of the management and policies on an entity, whether through the ownership of voting securities, by contract, or otherwise. For the avoidance of doubt, but not by way of limitation, the direct or indirect ownership of more than 50% of (i) the voting securities or (ii) an interest in the assets, profits, or earnings of an entity shall be deemed to constitute "control" of the entity.

Subject to the terms hereof, Amex or its Affiliate agrees to will issue Amex Accounts in the United States to employees, consultants and contractors (each an "Employee") of Company's Affiliates who are approved by Amex and/or its Affiliates and are designated and authorized by such Company Affiliates to incur legitimate business expenses on behalf of such Company Affiliates and in

accordance with the business expense policies of such Company Affiliates. In the event that Company's Affiliate has not executed this Agreement and Company requests that Amex establish an Amex Account in the name of such Affiliate, Company hereby represents that it has the authority to execute this Agreement on behalf of such Affiliate and to bind such Affiliate to the terms of this Agreement. Company shall cause each such Affiliate to comply with this Agreement and Company shall be liable to Amex for any breach of this Agreement by any such Affiliate. Except as expressly provided for herein, Company shall be liable for all Charges incurred on the Amex Accounts by any of Company's Affiliates.

1.2 Credit Approval / Credit Management

Company agrees that Amex and/or its Affiliate may request, and review, information about Company's finances and those of Company's Affiliates from Company and/or a credit reporting agency or other agency. Company agrees that Amex and/or its Affiliate may (a) obtain financial reports and/or request financial statements from Company or any of its Affiliates to ascertain the creditworthiness of (i) Company, (ii) any Company Affiliate and (iii) any Employees who have requested an Amex Account (by application or by designation by Company or its Affiliates or otherwise) and/or (b) obtain credit bureau and other reports with respect to any of the persons referenced in subsections (i), (ii) and (iii) above, including the performance of periodic creditworthiness checks through credit bureau and other reports. Company agrees that Amex and/or its Affiliate may approve or decline the issuance, renewal, or replacement of an Amex Account to Company, Company's Affiliates, their respective Employees and/or any other person, and cancel, suspend or limit spending on any Amex Account at any time for any reason. Amex and/or its Affiliate may require Company to provide a guaranty of payment from a third-party, pledge of collateral or other similar security.

Amex will issue renewal or replacement Amex Accounts, subject to the provisions above, until Company or the Commercial Cardmember(s) advise Amex to cancel the Amex Accounts or to stop renewal of the Amex Accounts.

2. CHARGES AND PAYMENT

2.1 Definition of Charges

"Charges" shall mean all amounts charged to any Amex Account pursuant to this Agreement, including, without limitation, purchases, cash advances, cash equivalents, fees and delinquency assessments.

2.2 Payment

Company shall not deduct or withhold, without Amex's prior approval, any amount shown as due on any billing statement. Acceptance of late payments, partial payments or any payment marked as being payment in full or as being a settlement of a dispute will not affect any of Amex's rights to payment in full and in doing so Amex does not lose or consent to vary any of its rights under this Agreement or applicable law.

Company shall submit all payments to the address shown on Company's billing statement, and, if paid by mail, such payment must include the remittance coupon from Company's billing statement. Company must pay Amex in U.S. currency, with a single draft or check drawn on a U.S. bank and payable in U.S. dollars, or with a single negotiable instrument payable in U.S. dollars and clearable through the U.S. banking system, or through an electronic payment method clearable through the U.S. banking system. Company shall include the applicable Amex account number with all payments.

Payments conforming to the above requirements that Amex receives no later than the hour specified on Company's billing statement will be credited to Company's Amex Account as of the day received; payments conforming to the above requirements that Amex receives after the hour specified on Company's billing statement will be credited to Company's Amex Account as of the following business day. If payment does not conform to the requirements stated above, crediting may be delayed. In such event, additional Charges may be imposed.

Company agrees that the payment terms set forth herein supersede any agreement with regard to payment terms established between Company and a seller of goods or services or any payment terms that might be imputed to Company and a seller of goods under applicable law for goods or services purchased using Amex Accounts.

2.3 Late Fees

If Charges are not paid when due, Amex may charge Company a late fee. The amount of the late fee depends on the Amex Account, the length of time the Charges have remained unpaid, and the address to which Company's billing statement is sent. Late fees will not exceed the maximum amount allowed by law. Court costs plus reasonable legal fees may be added to any delinquent balance referred to an attorney for collection. Amex may charge Company $29 for each check or draft that Company submits to Amex that is not honored for its full amount. Late fee calculations for each type of Amex Account are set forth in the Late Fees sections applicable to the Amex Account(s) and may include the following defined terms: (a) "Closing Date" means the date identified as the closing date on each billing statement, which is the cutoff date Amex determines for including Charges and payments for such billing statement; and (b) "Next Closing Date" with respect to any billing statement means the Closing Date of the billing statement that immediately follows such billing statement.

2.4 Fee for Suspended and Cancelled Accounts
If any Amex Account becomes ninety (90) days past due and Company's charge privileges are suspended, Amex may charge a $25 administrative suspense fee to Company, subject to applicable law. If Amex cancels the right of any Company Employees who are approved by Amex and/or its Affiliate and are designated and authorized by Company to incur expenses on its behalf (each a "Commercial Cardmember") to use any Amex Account due to Company's non-payment, Amex may charge a $25 reinstatement fee to Company to process requests to reinstate each cancelled Amex Account, subject to applicable law. Amex reserves the right, upon notice, to change the aforementioned fees and/or charge additional fees in connection with suspension or cancellation of Amex Accounts issued under this Agreement.

2.5 Charges made in Foreign Currency
If Company incurs a Charge in a foreign currency, it will be converted into U.S. dollars on the date it is processed by Amex or its agents. Unless a particular rate is required by applicable law, Company authorizes Amex to choose a conversion rate that is acceptable to Amex for that date. Currently, the conversion rate Amex uses for a Charge in a foreign currency is no greater than (a) the highest official conversion rate published by a government agency, or (b) the highest interbank conversion rate identified by Amex from customary banking sources, on the conversion date or the prior business day, **in each instance increased by 2.5%**. This conversion rate may differ from rates in effect on the date of the Charge. Charges converted by establishments (such as airlines) will be billed at the rates such establishments use.

3. LIABILITY

3.1 General. Company's liability on any Amex Account, including for use that (i) did not benefit either Company or the Commercial Cardmember and (ii) was incurred by someone who is not the Commercial Cardmember or who did not have actual, implied or apparent authority to use the Amex Account ("Unauthorized Use") is described in this Section 3. Company shall notify Amex if a Commercial Cardmember's authority to incur Charges on Company's behalf terminates for any reason. Company shall use commercially reasonable efforts to collect and dispose of plastic commercial cards issued to Commercial Cardmembers whose authority to incur expenses is terminated or whose Amex Account has been canceled. Company shall notify Amex, upon request, of a Commercial Cardmember's last known address and telephone number.

3.2 Liability Options. Subject to the availability of the liability options described below for the particular Amex Account implemented on behalf of Company, the following liability options shall apply to Amex Accounts:

(a) **Combined Liability**: Subject to the terms of Section 3.3 (Liability for Unauthorized Use), for Amex Accounts that have been approved by Amex and/or its Affiliate on the basis of "Combined Liability," Company and each Commercial Cardmember shall be jointly and severally liable for all Charges incurred by the Commercial Cardmember (except for cash advances which shall be Full Corporate Liability as set forth in Section 3.2(b) below); *provided, however,* that Company shall not be liable for Charges (i) incurred by the Commercial Cardmember that are personal in nature and which did not accrue a benefit to the Company for legitimate business purposes or (ii) for which Company has reimbursed the Commercial Cardmember.

(b) **Full Corporate Liability**: Subject to the terms of Section 3.3 (Liability for Unauthorized Use), for Amex Accounts that have been approved by Amex and/or its Affiliate on the basis of "Full Corporate Liability," Company shall be fully liable for all Charges incurred on such Amex Accounts.

3.3 Liability for "Unauthorized Use". Notwithstanding anything to the contrary contained in this Agreement:

(a) Neither Company nor a Commercial Cardmember shall be liable for Charges resulting from the Unauthorized Use of any Amex Account that has been issued (1) with corresponding physical plastic **and** (2) in the actual name of an individual Commercial Cardmember, except that Company shall be liable for payment to Amex of all Charges incurred from the date a Commercial Cardmember's authority to incur expenses on its behalf is terminated through the date that Amex receives notification from Company of such termination; and

(b) Where an Amex Account has been established (1) **without** corresponding physical plastic **or** (2) in a name **other than** the actual name of an individual Commercial Cardmember, Company shall be liable for all Charges, including, without limitation, Charges resulting from the Unauthorized Use of such Amex Account.

3.4 Company Obligations.
Company shall (a) instruct Commercial Cardmembers in writing that the Amex Accounts are issued solely for business purposes as permitted under this Agreement and should be used only in accordance with Company's policies and procedures, (b) promptly report any misuse of any Amex Account to Amex, (c) instruct Commercial Cardmembers in writing to promptly submit their expense reports covering Charges to Company and in any event at least once a month, (d) reimburse Commercial Cardmembers promptly for all Charges, and (e) to the extent permitted by applicable law, assist Amex in collecting any overdue payment from a Commercial Cardmember.

4. COMMERCIAL ACCOUNT PERFORMANCE

4.1 Use of Accounts
Company warrants and agrees that Company policy shall limit the use of Amex Accounts to legitimate business purposes and that Company shall comply with such policy. In no event shall an Amex Account be used for any other purpose, including, but not limited to, personal, family or household purposes of any Employee. Company shall notify in writing its Employees of this business purpose restriction to ensure that the Amex Accounts are used only for the legitimate business purposes of the Company and to preclude Unauthorized Use. All extensions of credit made pursuant to an Amex Account shall be deemed to be extensions of credit made to and for the benefit of Company and shall not be deemed to be to or for the benefit of an Employee.

4.2 Program Administration
Company shall designate in writing certain individual(s) to manage the Amex Accounts as its administrator on its behalf ("Program Administrators"). In addition, Company shall re-certify the designation of such Program Administrator(s) in writing on an annual basis. Company agrees and acknowledges that such Program Administrator(s) are authorized by Company to act on its behalf with respect to the Amex Accounts, and that Amex may rely on all written and oral directions and information Amex receives from the Program Administrator(s) regarding the Amex Accounts, including, but not limited to, issuance of Amex Accounts. The Program Administrator(s) responsibilities shall include, among other things:

- using American Express @ Work® to conduct maintenance transactions and access reports;
- promoting awareness and use of Manage Your Card Account;
- cooperating with Amex towards a goal of eighty-five percent (85%) of Amex Accounts and dollar balances to be in a current status and no more than one percent (1%) of Amex Accounts and dollar balances to be sixty (60) days past due;
- communicating a Company policy to all Commercial Cardmembers that restricts the use of the Amex Account(s) to business purposes; and
- providing to Amex, upon request, a statement as to whether or not a Commercial Cardmember has been reimbursed for Charges.

Company represents and warrants that it has obtained all consents and approvals, and made all disclosures required by applicable law, to allow the Program Administrator(s) to manage and take any action with respect to the Amex Accounts. Company is liable for all actions taken by the Program Administrator(s) with respect to the Amex Accounts. Amex is not responsible for fraud or malfeasance engaged in by any of Company's Employees, representatives or agents managing any Amex Account on Company's behalf.

5. MEMBERSHIP REWARDS PROGRAM AND CORPORATE CASHBACK® PROGRAM

The Corporate Card Account is the only Amex Account eligible for enrollment in the *Membership Rewards®* Program and the Corporate CashBack® Program, if available. The Corporate CashBack® Program is only available in the U.S, upon request by Company, as approved by Amex, and once Company provides Amex any authorization-related documentation. Company may enroll in multiple rewards programs (Corporate CashBack®, Corporate Membership Rewards®, Membership Rewards®); however, each individual Corporate Card may only earn one reward.

6. TERM AND TERMINATION

This Agreement shall commence as of the Effective Date (as defined below) and continue in full force and effect until terminated pursuant to the provisions set forth herein.

(a) Grounds for Termination of Agreement:

(i) Convenience. Either party may terminate this Agreement for any or no reason upon thirty (30) days written notice to the other party.

(ii) Financial Condition. Either party may terminate this Agreement effective immediately upon the occurrence of any of the following: (1) the liquidation or dissolution of the other party or (2) the insolvency of the other party or the filing of bankruptcy proceedings or similar proceedings with respect to the business of the other party.

(iii) Termination of Amex Accounts. This Agreement shall terminate immediately upon the termination of all of the Amex Accounts established hereunder. For the avoidance of doubt, the termination of an individual Amex Account will not result in termination of this Agreement if other Amex Accounts established hereunder will remain active after such termination.

(iv) Material Breach. Either party may terminate this Agreement effective immediately if the other Party has committed a material breach of its obligations under this Agreement and has failed to cure such material breach within thirty (30) days of receipt by the other Party of written notice thereof.

(b) Effect of Termination. The terms of this Agreement will continue to apply to any outstanding Charges and any other obligations incurred prior to the termination of this Agreement or any Amex Account. If any amounts owed by Company hereunder after such termination, then Company and its successors and permitted assigns shall remain liable for such amounts and will pay Amex within thirty (30) days of request.

7. AMENDMENTS

This Agreement may not be amended other than through an instrument in writing signed by Company and Amex, except that Amex has the right to effect Program Modifications at any time upon notice to Company unless otherwise required by applicable law. A "Program Modification" means a change (a) in or to a benefit or feature or method of operation of any Amex Account established hereunder or (b) in or to the Corporate Services Commercial Account Agreement which change is generally and broadly applicable to the type of Amex Account established hereunder or to the Corporate Services Commercial Account Agreement. Company agrees that any Program Modification by Amex shall become effective if Company maintains or uses the Amex Accounts after the effective date specified in the notice. Company may choose not to accept the Program Modifications by terminating this Agreement with notice to Amex.

8. CONFIDENTIALITY

Each party agrees to preserve, and ensure its Affiliates preserve, the confidentiality of all the terms of this Agreement and any information of a confidential and proprietary nature that the receiving party or its Affiliates (the "Receiving Party") receive from the other party or its Affiliates (the "Disclosing Party") in the performance of or in connection with this Agreement (collectively, the "Confidential Information") using at least the same degree of care as it employs in maintaining in confidence its own confidential information of a similar nature, but in no event less than a reasonable degree of care. Except that Company agrees that Amex may provide any Confidential Information to Educational and Institutional Cooperative Service, Inc. ("E&I"), including, without

limitation, information regarding Company's Amex Account(s). The foregoing confidentiality and restricted use obligations shall not apply to information that is: (a) in an aggregate form not attributable to the Disclosing Party; (b) already known and free of any restriction on the Receiving Party at the time it is obtained; (c) subsequently learned from an independent third party free of restriction; (d) publicly available; or (e) required by applicable law or court order to be disclosed; provided, however, that unless prohibited by law and if practicable, the Receiving Party shall (i) give prompt written notice of any such request or requirement to the Disclosing Party, and the Confidential Information of the Disclosing Party it believes it is required to disclose; and (ii) cooperate to the extent practicable with the Disclosing Party, at the Disclosing Party's expense, with any reasonable efforts of the Disclosing Party to avoid or minimize such disclosure and/or obtain confidential treatment thereof or other protective order. If the Disclosing Party is unable to obtain a protective order of confidential treatment, the Receiving Party may disclose the Disclosing Party's Confidential Information without breach of this Agreement.

The Receiving Party will not use or disclose the Disclosing Party's Confidential Information to any person, firm or other legal entity; provided, however, that (a) the Receiving Party may disclose the Disclosing Party's Confidential Information to its Affiliates, employees, officers, agents, representatives, including, without limitation, its legal and financial consultants, provided that such persons, firms or legal entities comply with the confidentiality provisions of this Agreement, and (b) we may use or disclose your Confidential Information in connection with performing services under this Agreement and/or providing or offering existing or new Amex benefits, products and services, including, without limitation, disclosing your Confidential Information to third-party service providers (or licensees) who are bound to keep such information confidential.

9. NOTICES

All notices required or permitted under this Agreement shall be delivered in writing to the other party as set forth in this Section 9. In the case of notices to Amex, notice shall be delivered to the addresses specified below, and in the case of notices to Company, notice shall be delivered to the Program Administrator or such other address as the Company gives notice of hereunder. Notice shall be deemed given (a) if delivered personally (including by overnight carrier or messenger), upon delivery or (b) if delivered by first class, registered or certified mail (return receipt requested), upon the earlier of actual delivery or three (3) days after being mailed.

To Amex:

American Express Company, Corporate Services Operations
AESC-P
20022 North 31st Ave, Mail Code AZ-08-03-11
Phoenix, AZ 85027

With a copy to:

American Express Travel Related Services Company, Inc.
200 Vesey Street
New York, NY 10285
Attn: General Counsel's Office

If to Company:

CLEARVIEW LOCAL SCHOOLS
Address: {{Address1_es_:signer }}
{{Address2_es_:signer }}
Attn: {{Attn_es_:signer }}

Any party may, by notice given in accordance with this Section 9, designate another address or individual for receipt of notices hereunder.

10. ASSIGNMENT

This Agreement may not be assigned, in whole or in part, whether voluntarily or by operation of law (including by way of sale of assets, merger, consolidation, or otherwise), without the prior written consent of Amex. Any purported assignment by operation of law is voidable in Amex's sole discretion. Except as otherwise specified herein, this Agreement binds, and inures to the benefit of, the parties and their respective successors and permitted assigns.

11. INDEMNIFICATION

Subject to Section 12, each party agrees to indemnify and hold harmless the other party, **to the extent permitted by law** from any third party claims, liabilities, losses or damages (including, without limitation, reasonable fees and disbursements of legal counsel in connection therewith) asserted against the other party and based upon or arising out of the indemnifying party's failure to perform, or its wrongful performance of, any of its obligations or duties under this Agreement.

Company acknowledges and agrees that, regardless of the basis of the claim or action, Amex shall not be liable in any manner for any problems with goods or services. If Company requests that Amex charge back a seller of goods or services and Amex does so, Company shall indemnify and hold harmless Amex, **to the extent permitted by law** from and against any claim against Amex based upon the rejection of such goods or services and the Charges related thereto.

12. LIMITATION OF LIABILITY

IN NO EVENT SHALL EITHER PARTY'S AGGREGATE LIABILITY FOR ANY CLAIMS, DAMAGES, LAWSUITS, LOSSES OR CAUSES OF ACTION ARISING UNDER OR RELATING TO THIS AGREEMENT (WHETHER IN CONTRACT, TORT, WARRANTY OR OTHERWISE) EXCEED ONE HUNDRED THOUSAND DOLLARS (USD $100,000). NOTWITHSTANDING ANYTHING TO THE CONTRARY HEREIN, THE FOREGOING LIMITATION OF LIABILITY SHALL NOT APPLY TO AMOUNTS DUE AND OWING TO AMEX HEREUNDER FOR CHARGES AND AMOUNTS DUE AND OWING TO EITHER PARTY PURSUANT TO THE FINANCIAL APPENDIX, IF ANY.

NOTWITHSTANDING ANYTHING CONTAINED IN THIS AGREEMENT TO THE CONTRARY AND EXCEPT AS OTHERWISE EXPRESSLY PROHIBITED BY APPLICABLE LAW, NEITHER PARTY NOR ITS DIRECT OR INDIRECT SUBSIDIARIES, AFFILIATES, AGENTS, EMPLOYEES OR REPRESENTATIVES SHALL BE LIABLE TO THE OTHER PARTY FOR ANY INDIRECT, SPECIAL, INCIDENTAL, CONSEQUENTIAL, PUNITIVE, OR EXEMPLARY DAMAGES OF ANY KIND (INCLUDING, WITHOUT LIMITATION, LOST REVENUES, LOSS OF PROFITS, OR LOSS OF BUSINESS), ARISING FROM THIS AGREEMENT OR RELATING TO THE OBLIGATIONS HEREUNDER, EVEN IF ADVISED OF SUCH POTENTIAL DAMAGES.

13. GOVERNING LAW

This Agreement shall be governed by, construed and enforced in accordance with the laws of the State of New York (without giving effect to the conflict of laws principles thereof other than Section 5-1401 of the New York General Obligations Law).

14. FORCE MAJEURE

Neither party, nor Amex's Affiliates, third party suppliers and licensors, will be liable for any failure or delay in performance, except for any payment obligations, resulting from circumstances beyond their control including, without limitation, acts of God or nature, government intervention, power, communications, satellite or network failures, unauthorized access or theft, acts of terror, or labor disputes or strikes.

15. ACCOUNT INFORMATION AND DATA PROTECTION

Company understands and agrees that Amex will process and analyze information about how Company and Company's Employees use the Amex Accounts to develop reports to be made available to Company or to Company's related companies as directed by Company in writing.

The information used to develop these reports may be obtained from the Amex Account and other specific sources, such as computerized reservation systems, airlines and other merchants and suppliers. Amex will keep information about Company and

Company's Employees only for so long as is appropriate for the purposes of this Agreement or as required by applicable law.

Company agrees that Amex may also, when requested, provide information related to Charges on the Amex Account to selected merchants and suppliers used by Company for such merchants and suppliers to analyze business trends, customer needs and generally for marketing and operational purposes. Amex agrees that the provision of such data will be in a format non-attributable to Company or a Commercial Cardmember and will be processed only within the scope of this Agreement or in connection with the performance of it. If Company requests that Amex release specific information related to Charges incurred by a Commercial Cardmember, Company will be responsible for obtaining such Commercial Cardmember's written consent to such release of information.

Company agrees that Amex may, or reputable organizations selected by Amex may, where allowed by local law, monitor and/or record telephone calls to or from Company to ensure consistent servicing levels (including staff training) and operations.

Amex will use commercially reasonable efforts to inform Commercial Cardmembers about Amex's use of their personal information for Amex's own purposes. Upon a Commercial Cardmember's request, Amex will also provide Commercial Cardmembers with information Amex holds about them. Some information may not be accessed if it refers to others, is subject to legal privilege, contains confidential information, cannot be retrieved using a Commercial Cardmember's name or account number, cannot be disclosed for legal reasons, or is otherwise prohibited by applicable law. There may be a charge for such information, as permitted by applicable law. If requested by Amex, Company shall instruct Commercial Cardmembers to update, once a year, their profile information held by Amex.

If Company chooses to use a third party data consolidator, or indicates that one or more of Company's Affiliates will perform data consolidation services on behalf of Company, then upon Company's written request and upon execution of a separate Data Protection Authorization and Direction (a copy of which shall be provided to Company upon request), Amex agrees to forward Company's Amex Account information so that such third party data consolidator may process Company's Amex Account information.

16. DISPUTE RESOLUTION

This section explains how Disputes (as defined in this section) can be resolved through mediation, arbitration or litigation. "Dispute" means any claim (including initial claims, counterclaims, cross-claims, and third party claims), dispute or controversy arising from or relating to this Agreement, or prior commercial card agreements between Company and Amex, or the relationship resulting therefrom, whether based in contract, tort (including negligence, strict liability, fraud or otherwise), statutes, regulations, or any other theory, including any question relating to the existence, validity, performance, construction, interpretation, enforcement, or termination of this Agreement or any prior commercial card agreement between Company and Amex, or the relationship resulting therefrom.

If a Dispute is initially submitted to mediation and it is not resolved within forty-five (45) days of the first mediation session, then the Dispute may be settled through arbitration or litigation. Company or Amex may elect to resolve any Dispute by individual, binding arbitration. This includes the right to elect to arbitrate any Dispute that may have been filed in court at any time before trial has begun or final judgment has been entered on the Dispute. **If arbitration is chosen by any party, neither Company nor Amex will have the right to litigate that Dispute in court or have a jury trial on that Dispute. Further, Company and Amex will not have the right to participate in a representative capacity or as a member of any class pertaining to any Dispute subject to arbitration.** Any mediation and/or arbitration shall take place in the State of New York, New York County, and shall be administered by, and pursuant to the rules of, the American Arbitration Association or JAMS as selected by the party that elects arbitration. In the event of any inconsistency between this Section and any rule of the arbitration organization, this Section will control. The arbitrator's authority to resolve Disputes and to make awards is limited to Disputes between the parties of this Agreement alone and is subject to the limitations of liability set forth in this Agreement. Furthermore, Disputes brought by either party against the other may not be joined or consolidated in arbitration with Disputes brought by or against any third party, unless agreed to in writing by all parties. Either Company or Amex may choose to delay enforcing or to not exercise rights under this arbitration provision, including the right to elect to arbitrate a Dispute, without waiving the right to exercise or enforce these rights on any other occasion. No arbitration award or decision shall be given preclusive effect as to issues or claims in any Dispute with anyone who is not a party to the arbitration. Both parties will share equally the costs of any arbitration proceedings. The parties agree that the arbitrators' decision shall be final and binding. Should any portion of this Section regarding the arbitrator's authority to resolve Disputes between the parties of this Agreement be stricken from this Agreement or deemed otherwise unenforceable, then this entire Section shall be stricken from this Agreement. The provisions of this Section may be enforced in a court of competent jurisdiction, and the party

seeking enforcement shall be entitled to an award of all costs, fees and expenses incurred in obtaining the enforcement of this provision to be paid by the party against whom enforcement is ordered. Either party shall have the right to seek equitable relief (i) in arbitration prior to the arbitration proceedings to enforce the status quo, and (ii) in a court to enforce the confidentiality provisions set forth in this Agreement. The mediation/arbitration proceedings and all documentation and/or information related to such processes shall be deemed confidential. This arbitration provision is made pursuant to a transaction involving interstate commerce, and shall be governed by the Federal Arbitration Act, 9 U.S.C. Sections 1-16, as it may be amended.

17. MISCELLANEOUS

(a) Time Limit on Actions. Any claim or cause of action arising out of or related to this Agreement must be filed by Company within one (1) year after such claim or cause of action arose or forever be barred.

(b) Third-Party Beneficiary. Except for Amex's Affiliates, suppliers and licensors, no third party shall be a beneficiary of this Agreement.

(c) No Waiver. Except as otherwise expressly provided for herein, failure to enforce any term or condition of this Agreement shall not be a waiver of the right to later enforce such term or condition or any other term or condition of this Agreement.

(d) Severability. In the event that any provision of this Agreement is held to be illegal, invalid or unenforceable, the remaining provisions of this Agreement will remain in full force and effect. If any provision of this Agreement conflicts with any applicable law or regulation, such provision shall be deemed to be modified or deleted so as to be consistent with such law or regulation in a manner closest to the intent of the original provision of this Agreement.

(e) Entire Agreement. This Agreement (including, addendums, schedules, tables, appendices and attachments hereto) constitute the entire agreement between the parties and supersede any previous oral or written agreements or understandings between the parties relating to the subject matter hereof.

(f) Intellectual Property. All copyright, design right and other intellectual property rights in any plans, drawings, specifications or other documents or materials produced by Amex, its Employees, agents or sub-contractors for the purpose of performing the services under this Agreement shall belong to Amex and vest in Amex.

(g) Negotiated Terms; Construction. This Agreement has been negotiated by the parties and their respective legal counsel and will be fairly interpreted in accordance with its terms and provisions without any strict construction in favor of or against any party. In construing this Agreement, unless the context requires otherwise: (i) the singular includes the plural and vice versa; (ii) the term "or" is not exclusive; (iii) the term "including" means "including, but not limited to;" (iv) the term "day" means "calendar day"; and (v) any reference to any agreement (including this Agreement), instrument, contract, policy, procedure, or other document refers to it as amended, supplemented, modified, suspended, replaced, restated, or novated from time to time.

(h) Survival. Sections 2 (Charges and Payment), 3 (Liability), 6(b) (Effect of Termination), 8 (Confidentiality), 9 (Notices), 11 (Indemnification), 12 (Limitation of Liability), 13 (Governing Law), 16 (Dispute Resolution), and 17 (Miscellaneous) shall survive the termination of this Agreement.

(i) Headings. The headings, titles and subtitles used in this Agreement are used for convenience only and are not to be considered in construing or interpreting this Agreement.

(j) Compliance with Laws. At all times during the term of this Agreement, each party will comply with all laws and regulations applicable to such party in connection with the performance of its obligations under this Agreement.

B. ACCOUNT PROVISIONS

18. CORPORATE CARD ACCOUNT

18.1. Liability – Company and the Commercial Cardmember shall be jointly and severally liable for all Charges incurred on the Corporate Card Accounts in accordance with and subject to the terms of Section 3.2(a) above; *provided, however*, that for

Corporate Card Accounts with the Company Bill Account billing option, as defined below, which are approved by Amex and/or its Affiliate, Company shall be fully liable for all Charges incurred on such Corporate Card Account in accordance with and subject to the terms of Section 3.2(b) above. "Company Bill Account" means an Amex Account where the Company has opted in writing to receive and has been approved by Amex and/or its Affiliate to receive, the billing statement directly from Amex and the Company pays Amex directly for Charges.

18.2. Annual Corporate Card Fees - An annual fee will be payable to Amex for each Corporate Card and will be determined in accordance with the then current Corporate Card fee policies.

18.3. Late Fees for Individual Bill Accounts – For Corporate Card Accounts that are Individual Bill Accounts, as defined below, late fees will accrue according to the Cardmember Agreement in effect at the time of the Charges. "Individual Bill Account" means an Amex Account in which the billing statement is sent to the Commercial Cardmember, regardless of the payment option selected.

18.4. Late Fees for Company Bill Accounts – For Corporate Card Accounts with the Company Bill/Company Payment billing option, late fees will accrue as follows: (a) if there are any amounts totaling more than $50.00 , in aggregate, that were incurred during a statement billing period and that have not been paid and credited to your Account by Next Closing Date, a late fee of $39.00 may be charged per Cardmember; and (b) if there are any amounts totaling more than $50.00, in aggregate, that were incurred during a statement billing period and that have not been paid and credited to your Account by the following Next Closing Date, a late fee equal to the greater of $39.00 per Cardmember or 2.99% of all amounts not credited for at least one statement billing period will be charged; and (c) if payment of the total amounts due is not credited to your Account by successive Next Closing Dates, we may assess a fee equal to the greater of $39.00 per Cardmember or 2.99% of all amounts not credited for at least one statement billing period. Late fees will not exceed the maximum allowed by law.

18.5. Expedited Delivery Fee - Amex reserves the right to charge a fee for granting a Program Administrator's request for expedited delivery of Corporate Cards.

19. Intentionally Omitted.

20. BUSINESS TRAVEL ACCOUNT (Virtual)

20.1. Issuance - Upon Company's request, Amex and/or its Affiliate will establish the Business Travel Account for use by certain of Company's Employees, departments, divisions or other business groups including certain supplementary virtual card accounts (supplementary accounts, collectively with the Business Travel Account, are referred to in this Agreement as the "BTA"). Company will use the BTA to charge (i) air and rail transportation tickets for business use through its travel agents and/or (ii) hotel, low cost air carrier, and incidental business travel expenditures via the supplementary virtual card accounts (" Dynamic VANs").

20.2. Charges - Company must notify Amex of Charges regarding returned or lost tickets of which Company has no knowledge within sixty (60) days of the date such Charges first appear on a monthly statement. Subject to the provisions regarding liability set forth herein, Company is also liable for payment in full for all Charges which result from the Unauthorized Use or misuse of the BTA by any travel agent, or any person currently or formerly included on a List (defined below).

20.3. Liability - Company shall be fully liable for all Charges incurred on the BTA in accordance with Section 3.2(b) above. Amex will send to Company a monthly statement listing all Charges. Company agrees to pay Amex in full for all Charges upon its receipt of the monthly statement. Company must notify Amex of any alleged errors or disputes within sixty (60) days of the date such Charges first appear on a monthly statement.

20.4. Travel Agents - Company will instruct its travel agents in the use of the BTA and will provide its travel agents with a list (" List") of persons authorized by Company to use the BTA and will notify its travel agents of any changes to such List. Company shall resolve any unreconciled Charges directly with its travel agent or the supplier providing services. Amex and/or its Affiliate is not responsible for the acts or omissions of any travel agents, carriers, hotels, or other firms providing services.

20.5 Dynamic VAN(s) –Company acknowledges and agrees that to use enhanced BTA for hotel and low cost carrier airline bookings, a third party service provider (" BTA Facilitator"), with whom your travel services provider has a separate agreement, is required to automate the distribution of virtual account numbers. Currently, Amex has chosen to work with Conferma, an unaffiliated third party, to provide virtual account number services in connection with enhanced BTA. Company agrees to provide Amex a BTA set up form (a copy of which shall be provided to you) that is executed by an authorized

signatory of Company. If Company acts as its own travel services provider, Company shall enter into an agreement between Company and BTA Facilitator and additional transaction fees, terms and conditions may apply. Company acknowledges and agrees that Amex and/or its Affiliate is not responsible for any negligence, fraud or willful misconduct of either the travel services provider, or the BTA Facilitator and/or its employees, subcontractors or agents in connection upon accessing or using the Company's BTA Account.

20.6. Annual Fee - No annual fee for the BTA; however, the annual fee (if any) is subject to change upon not less than sixty (60) days prior written notice to Company.

20.7 Late Fees – Late fees will accrue as follows, unless prohibited by applicable state law: (a) if there are any amounts totaling more than $50.00, in the aggregate, that were incurred during a statement billing period and that have not been paid and credited to Company's Amex Account by the Next Closing Date, a late fee of $39.00 **may** be charged; (b) if there are any amounts totaling more than $50.00, in aggregate, that were incurred during a statement billing period and that have not been paid and credited to Company's Amex Account by the following Next Closing Date, a late fee equal to the greater of $39.00 or 2.99% of all amounts not credited for at least one statement billing period may be charged; and (c) if payment of the total amount due is not credited to Company's Amex Account by successive Next Closing Dates, Amex **may** assess a fee equal to the greater of $39.00 or 2.99% of all amounts not credited for at least one statement billing period. Late fees will not exceed the maximum allowed by law.

20.8 Miscellaneous - Amex will notify Company of changes to the terms of certain insurance programs available to persons using the BTA. Company agrees to notify all persons authorized to use the BTA of any such changes.

20.9 Supplementary Virtual Card Accounts. Company must activate each individual supplementary virtual card account by providing Virtual Account Parameters to settle a transaction. During the activation process, Amex will receive and register such Virtual Account Parameters for that individual supplementary virtual card account and will provide a single use account number to settle such transaction. Supplementary virtual card account numbers will not bear the name or signature of a specific employee. " Virtual Card Account Parameter" means a specific payment amount and payment date(s), if specified, and the payee, supplied by Company to activate each individual supplementary virtual card account number.

20.10 Termination of a Single Virtual Card Account. With respect to individual supplementary virtual card accounts, the Company (i) may terminate a single virtual card account by providing notice of such termination of authority to Amex and Amex shall immediately take steps to effectuate such termination within a reasonable time (not to exceed 24 business hours), and (ii) may not terminate a single virtual card account for which Virtual Card Account Parameters have been provided to Amex and for which a merchant has received authorization.

20.11 Problems with Goods or Services. Company agrees to resolve any disputes concerning goods or services purchased using the Virtual Card Account directly with the seller.

21. CAR RENTAL BUSINESS TRAVEL ACCOUNT

21.1. Issuance - Upon Company's request, Amex and/or its Affiliate will assign supplementary accounts under the Car Rental Business Travel Account to certain of Company's Employees, departments, divisions or other business groups (supplementary accounts, collectively with the Car Rental Business Travel Account, are referred to in this Agreement as the "CRBTA"). Company will only use the CRBTA to charge car rental and related services for business use through its travel agents.

21.2. Charges - Company must notify Amex of Charges of which Company has no knowledge within sixty (60) days of the date such Charges first appear on a monthly statement. Subject to the provisions set forth in Section 21.3 herein, Company is also liable for payment in full for all Charges which result from the Unauthorized Use or misuse of the CRBTA by any travel agent other than Amex or any person currently or formerly included on a List.

21.3. Liability - Company shall be fully liable for all Charges incurred on the CRBTA in accordance with Section 3.2(b) above. Amex will send to Company a monthly statement listing all Charges. Company agrees to pay Amex in full for all Charges upon its receipt of the monthly statement. Company must notify Amex of any alleged errors or disputes within sixty (60) days of the date such Charges first appear on a monthly statement.

21.4. Travel Agents - Company will instruct its travel agents in the use of the CRBTA and will provide its travel agents with a list (" List") of persons authorized by Company to use the CRBTA and will notify its travel agents of any changes to such List. Company shall resolve any unreconciled Charges directly with its travel agent or the supplier providing services. Amex and/or its Affiliates are not responsible for the acts or omissions of any travel agents, carriers, or other firms providing services.

21.5. Annual Fee - The annual fee for the CRBTA is $150 and is subject to change upon not less than sixty (60) days prior written notice to Company.

21.6 Late Fees – Late fees will accrue as follows, unless prohibited by applicable state law: (a) if there are any amounts totaling more than $50.00, in the aggregate, that were incurred during a statement billing period and that have not been paid and credited to Company's Amex Account by the Next Closing Date, a late fee of $39.00 may be charged; (b) if there are any amounts totaling more than $50.00, in aggregate, that were incurred during a statement billing period and that have not been paid and credited to Company's Amex Account by the following Next Closing Date, a late fee equal to the greater of $39.00 or 2.99% of all amounts not credited for at least one statement billing period may be charged; and (c) if payment of the total amount due is not credited to Company's Amex Account by successive Next Closing Dates, Amex may assess a fee equal to the greater of $39.00 or 2.99% of all amounts not credited for at least one statement billing period. Late fees will not exceed the maximum allowed by law.

21.7 Miscellaneous - Amex will notify Company of changes to the terms of certain insurance programs available to persons using the CRBTA. Company agrees to notify all persons authorized to use the CRBTA of any such changes.

22. Intentionally Omitted.

23. Intentionally Omitted.

24. Intentionally Omitted.

25. CORPORATE PURCHASING CARD (CPC) ACCOUNT

25.1. Use of Corporate Purchasing Card - Company agrees that it will implement and communicate Company policies that require Corporate Purchasing Cards issued hereunder to be used only for the purchase of goods and services on Company's behalf and in accordance with Company's policies. Company also agrees that its policies will be in strict conformity with the Corporate Purchasing Card terms and conditions included with each Corporate Purchasing Card issued hereunder. In the event any of the terms and conditions of this Agreement conflict with those of the Corporate Purchasing Card Terms and Conditions, this Agreement will prevail. Individual use of Corporate Purchasing Cards is governed by the cardmember agreement.

25.2. Liability - Company shall be fully liable for all Charges incurred on the CPC Accounts in accordance with Section 3.2(b) above.

25.3. Expedited Delivery Fee - Amex reserves the right to charge a fee for granting a Program Administrator's request for expedited delivery of Corporate Purchasing Cards.

25.4. Payment Terms / Settlement - Company agrees to pay all Charges shown on each consolidated monthly statement within fourteen (14) calendar days after the Closing Date specified on the applicable consolidated monthly statement. If Company believes any Charge shown on a consolidated monthly statement is in error or in dispute with the seller, Company may request, and Amex may institute and maintain for a reasonable period, a temporary credit on the Corporate Purchasing Card Account in the amount of the disputed portion of the Charge while Amex investigates the error or Company seeks to resolve the dispute.

25.5. Late Fees - The amount of the late fee depends on the length of time an account on any consolidated monthly statement has remained unpaid. If there are any amounts totaling more than $50.00, in the aggregate, that were incurred during a statement billing period on any consolidated monthly statement and that have not been paid and credited to Company's Amex Account by the Next Closing Date of such consolidated monthly statement, then a late fee equal to the greater of $29.00 or 2.99% of all amounts not credited for at least one statement billing period may be charged. Late fees will not exceed the maximum allowed by law.

25.6. Problems with Goods or Services - Company agrees to resolve any disputes concerning goods or services purchased using the Corporate Purchasing Card directly with the seller.

25.7. Access to Information - Amex may compile and convey to Company certain information provided to Amex by the sellers of goods and services Company purchased using the Corporate Purchasing Card, such as, for example, a seller's tax identification number and SIC number and the seller's status as a minority-owned or woman-owned business. Amex does not guaranty the accuracy of any such information and, by conveying such information to Company and does not undertake to perform on Company's behalf any reporting, compliance or other obligation or requirement applicable to Company pursuant to any law,

regulation, executive order or court order.

25.8. **CPC Department Account** – Upon Company's request, Amex and/or its Affiliate shall establish account(s) for the billing of purchases from certain merchants that accept payment via such accounts ("CPC Department Accounts"). Except as specifically provided herein, the terms of this Agreement which are applicable to the CPC Account and/or Corporate Purchasing Cards shall apply to the CPC Department Account. Company shall be fully liable for all Charges incurred on the CPC Department Account in accordance with Sections 3.2(b) and 3.3(b) above.

25.9. **Monthly Spending Limit** - Amex may assign a monthly spending limit (the "Monthly Account Limit") to the CPC Account. The aggregate dollar amount of CPC Charges to Corporate Purchasing Cards issued on the CPC Account may not exceed the Monthly Account Limit. Once the Monthly Account Limit has been reached during a billing cycle, charge privileges for Corporate Purchasing Cards issued on the CPC Account will be suspended until the beginning of the next billing cycle. Amex will notify Company of the Monthly Account Limit, and Amex may change the Monthly Account Limit upon notice to Company. If authorization for any CPC Charge is declined based upon the Monthly Account Limit, Amex may notify the applicable merchant of the reason for the decline of the authorization request. Company agrees to notify the Commercial Cardmembers of the Monthly Account Limit and of the consequences of exceeding the Monthly Account Limit.

25.10. **Card Limits** - Amex may assign limits ("Card Functionality Limits") to particular Corporate Purchasing Cards issued on the CPC Account based upon dollar amounts charged per billing cycle, the type of merchant establishments at which CPC Charges may be incurred, or other parameters Company and Amex agree upon. Certain CPC Charges in excess of or outside the parameters of the Monthly Account Limit or Card Functionality Limits may be incurred. Notwithstanding anything to the contrary contained herein or in any other agreement, and except for CPC Charges resulting from the Unauthorized Use of a Corporate Purchasing Card, Company is liable for CPC Charges in excess of or outside the parameters of any Monthly Account Limit or any Card Functionality Limit.

26. Intentionally Omitted.

27. Intentionally Omitted.

28. CORPORATE MEETING CARD ACCOUNT

28.1. **Liability** – Company shall be fully liable for all Charges incurred on the Corporate Meeting Card Accounts in accordance with Section 3.2(b) above.

28.2. Late Fees – Late fees will accrue as follows, unless prohibited by applicable state law: (a) if there are any amounts totaling more than $50.00, in the aggregate, that were incurred during a statement billing period and that have not been paid and credited to Company's Amex Account by the Next Closing Date, a late fee of $39.00 may be charged; (b) if there are any amounts totaling more than $50.00, in aggregate, that were incurred during a statement billing period and that have not been paid and credited to Company's Amex Account by the following Next Closing Date, a late fee equal to the greater of $39.00 or 2.99% of all amounts not credited for at least one statement billing period may be charged; and (c) if payment of the total amount due is not credited to Company's Amex Account by successive Next Closing Dates, Amex may assess a fee equal to the greater of $39.00 or 2.99% of all amounts not credited for at least one statement billing period. Late fees will not exceed the maximum allowed by law.

28.3. Annual Corporate Meeting Card Fee – An annual fee will be payable by Company for each Corporate Meeting Card. The annual fee assessed during each annual period will be determined in accordance with the then current Corporate Meeting Card fee schedule.

28.4. Corporate Meeting Card Supplemental Account - The provisions of this Section 28.4 shall take effect on the date of execution of the Corporate Meeting Card Supplemental Account Application provided to Company upon request. Except as specifically provided herein, the terms of this Agreement which are applicable to the Corporate Meeting Card Account and/or Corporate Meeting Cards shall apply to the Corporate Meeting Card Supplemental Account.

28.4.1. Upon Company's request, cards with account numbers that represent supplemental accounts to the Company's primary Corporate Meeting Card Account, will be assigned to certain of Company's Employees, departments, divisions or other business groups

28.4.2. Only plastic cards shall be issued in connection with Company's CMC Supplemental Account. Plastic cards issued under a CMC Supplemental Account are subject to the same annual fee, if any, for Corporate Meeting Cards issued under this Agreement.

28.4.3. The CMC Supplemental Account(s) established pursuant to this Section 28.4 will be subject to any limits indicated by Company on the Supplemental Account Application.

28.5. Corporate Meeting Card Department Account - Company shall be fully liable for all Charges incurred on the Corporate Meeting Cards specific to a Company department or meeting/event in accordance with Sections 3.2(b) and 3.3(b) above.

29. vPAYMENT ACCOUNT

29.1 Request for an Account – Subject to Amex's receipt of the vPayment Account-related documentation signed by an authorized representative of the Company, Amex and/or its Affiliate will establish vPayment Accounts.

29.2 Liability – Company shall be liable for all Charges incurred on vPayment Accounts, provided that notwithstanding anything to the contrary contained in this Agreement, Company shall not be liable for Charges resulting from the Unauthorized Use of vPayment for vPayment Accounts.

"Unauthorized Use of vPayment" means (i) a use of a vPayment Account not in accordance with the Agreement, (ii) a use of a vPayment Account initiated by a third party for which vPayment Account Parameters have not been provided to Amex by Company, any Company Employee or any Company-authorized representative, or (iii) use of a vPayment Account for which Charges on the vPayment Account are not in accordance with the vPayment Account Parameters due solely to incorrect processing by Amex; provided that an Unauthorized Use of vPayment shall NOT include (i) a use which results from the Company's failure to maintain industry standard security procedures, (ii) a use caused by Company's unreasonable delay in notifying Amex that a vPayment Account was or may be compromised, (iii) a personal use or any other use that results in a direct benefit to the Company, any Company Employee or any Company-authorized representative, or (iv) Charges which result from the misuse of the vPayment Account by any vPayment Facilitator or Travel Services Provider, as applicable.

"vPayment Account Parameter" means a specific payment amount and payment date(s), if specified, the payee, supplied by Company to activate each individual vPayment Account.

29.3 vPayment Accounts – Company must activate each individual vPayment Account by providing vPayment Account Parameters to Amex to settle a transaction. During the activation process, Amex will receive and register such vPayment Account Parameters for that individual vPayment Account and will provide a single use account number to Company to settle such transaction. Physical plastic cards will not be issued in conjunction with vPayment Accounts. vPayment Accounts will not bear the name or signature of a specific employee.

29.4 vPayment Account Fees – The following fees will apply to vPayment Accounts:

Late Payment Fee, Per Occurrence: 2.99% of outstanding balance due assessed at 30 days.

Copy Retrieval Fee, Per Request: $5.00 each.

Returned Item (insufficient funds) Fee: $15.00.

29.5 Use of vPayment Accounts – Company agrees that vPayment Accounts may only be used by the Company for legitimate business purposes in accordance with this Agreement.

29.6 vPayment Facilitator – If Company elects to use a third party to act as its agent to facilitate Company's use of and reporting for the vPayment Account ("vPayment Facilitator") in coordination with Company's Travel Services Provider, as applicable, Company agrees to provide Amex any authorization-related documentation for such vPayment Facilitator or a vPayment Authorization Form (a copy of which may be provided to Company upon request) and executed by an authorized signatory of Company. Upon receipt of authorization and approval by Amex of such vPayment Facilitator, and, as applicable, upon acceptance by vPayment Facilitator, Amex agrees to work with your vPayment Facilitator in coordination with your Travel Services Provider, as applicable, to implement your vPayment Account to enable the vPayment Facilitator's access to and use of, and as applicable provide reconciliation for, the vPayment Account on your behalf solely in accordance with the terms of this Agreement. You acknowledge and agree that the vPayment Facilitator and Travel Services Provider, as applicable, are Company's agent(s) acting on your behalf at your request and that Company is liable for all transactions initiated or Charges made by the vPayment Facilitator and Travel Services Provider, as applicable, using your vPayment Account. Company acknowledges and agrees that Amex is not responsible for any negligence, fraud or willful misconduct of either the Travel Services Provider, as applicable, or the vPayment Facilitator and/or its employees, subcontractors or agents in connection upon accessing or using the Company's vPayment Account. This authorization may be revoked by Company at any time upon receipt by Amex of written notice from Company. Company shall be liable for any action taken by the vPayment Facilitator or Travel Services Provider, as applicable, prior to the effective date of such revocation.
Travel Services Provider means Company's third party services provider with whom Company or Travel Services Provider, as applicable, have entered into one or more agreements for the provision of services pursuant to which, among other things, Travel Services Provider will provide services that require access to and use of and to provide reporting for Company's vPayment Account(s).

29.7 Late Fees – The amount of the late fee depends on the length of time an account on any consolidated monthly statement has remained unpaid. If there are any amounts that were incurred during a statement billing period on any consolidated monthly statement and that have not been paid and credited to Company's Amex Account by Next Closing Date, then a late fee equal to 2.99% of all amounts not credited may be charged. Late fees will not exceed the maximum allowed by law.

29.8 Charges made in Foreign Currency – If Company incurs a Charge in a foreign currency, it will be converted into U.S. dollars on the date it is processed by Amex or its agents. Unless a particular rate is required by applicable law, Company authorizes Amex to choose a conversion rate that is acceptable to Amex for that date. Currently, the conversion rate Amex uses for a Charge in a foreign currency is no greater than (a) the highest official conversion rate published by a government agency, or (b) the highest interbank conversion rate identified by Amex from customary banking sources, on the conversion date or the prior business day, in each instance increased by 1.0%. This conversion rate may differ from rates in effect on the date of the Charge. Charges converted by establishments (such as airlines) will be billed at the rates such establishments use.

29.9 Problems with Goods or Services – Company agrees to resolve any disputes concerning goods or services purchased using the vPayment Account directly with the seller.

29.10 Termination of vPayment Accounts – Notwithstanding Section 6(a)(i), with respect to vPayment Accounts, the Company (i) may terminate a vPayment Account by providing notice of such termination of authority to Amex and Amex shall immediately take steps to effectuate such termination within a reasonable time (not to exceed 24 business hours), and (ii) may not terminate a vPayment Account for which vPayment Account Parameters have been provided to Amex and for which a merchant has received authorization.

30. FINANCIAL ARRANGEMENTS

The financial arrangements between the parties are located in the attached Appendix A, which is made as part of this Agreement.

The Terms and Conditions of this Commercial Account Agreement are effective as of the last date written below ("Effective Date").

AMERICAN EXPRESS TRAVEL RELATED SERVICES COMPANY INC.

By: {{_es_signer2_signature }}

Printed Name: {{_es_signer2_fullname }}

Title: {{_es_signer2_title }}

Date: {{_es_signer2_date}}

CLEARVIEW LOCAL SCHOOLS

By: {{_es_signer_signature }}

Printed Name: {{_es_signer_fullname }}

Title: {{_es_signer_title }}

Date: {{_es_signer_date}}

APPENDIX A
FINANCIAL APPENDIX FOR COMMERCIAL CARD IN THE UNITED STATES ONLY

This Financial Appendix for Commercial Card in the United States Only (this "Financial Appendix") supplements and constitutes a part of the Corporate Services Commercial Account Agreement between Amex and Company, as amended (the "Agreement"). Terms used with initial capital letters but not defined herein shall have the meaning ascribed to them either (i) in the Agreement, or (ii) in the U. S. Buyer Initiated Payments Services Addendum, as applicable.

Subject to the terms and conditions set forth in this Financial Appendix, Amex agrees to provide the financial incentives as described herein.

I. DEFINITIONS

(a) **Aggregate Commercial Card NACV** – is the aggregate amount of CC-NACV and B2BNACV for all Member Entities.

(b) **Aggregate NQCV ("ANQCV")** – is the aggregate amount of NQCCCV for all Member Entities.

(c) **B2B Accounts** – means the aggregate of your Corporate Purchasing Card Accounts, BIP Accounts and vPayment Accounts.

(d) **Becton Dickinson Program Affiliates ("BD Program Affiliates")** – means, as of the Amendment Effective Date, the following entities listed below and any other affiliates that may become BD Program Affiliates. This list may be updated from time to time without notice. A complete schedule of the then current Becton Dickinson Program Affiliates may be provided by American Express to Company upon written request from Company.

- Becton, Dickinson and Co, Becton, Dickinson and Com, C.R. Bard, Inc.

(e) **BD Transactions** – shall be defined as individual Charges on your BIP Accounts with Becton Dickinson Program Affiliates.

(f) **Billed Charges for B2B Accounts** – for a billing cycle, means the amount equal to the total amount of new Charges incurred on the B2B Accounts during such billing cycle.

(g) **Billed Charges for Select Amex Accounts** – for a billing cycle, means the amount equal to the total amount of new Charges incurred on the Select Amex Accounts during such billing cycle.

(h) **BIP Account(s)** – means your Buyer Initiated Payment transactions made through your Corporate Purchasing Card Account(s) established in the United States.

(i) **CHD B2B Benchmark** – means the benchmark from which the Payment Performance will be compared. For purposes of this Financial Appendix, the CHD Benchmark is 7.

(j) **CHD CC Benchmark** – means the benchmark from which the Payment Performance will be compared. For purposes of this Financial Appendix, the CHD Benchmark is 7.

(k) **CHD B2B Performance** – means, for all billing cycles that end within a Contract Year, (i) the cumulative of all Daily Ending Balances for B2B Accounts divided by (ii) the cumulative of all Billed Charges for B2B Accounts.

(l) **CHD CC Performance** – means, for all billing cycles that end within a Contract Year, (i) the cumulative of all Daily Ending Balances for Select Amex Accounts divided by (ii) the cumulative of all Billed Charges for Select Amex Accounts.

(m) **Commercial Cards or Commercial Card Accounts** – means all Member Entities B2B Accounts and all Member Entities Select Amex Accounts.

(n) **Contract Year** – is the period beginning on the Financial Effective Date and ending one day before the one-year anniversary of the Financial Effective Date, and each one-year period thereafter that occurs during the Term.

(o) **Corporate CashBack® Program Expenses ("CCB Expenses")** – is the amount of cash back statement credits received on Corporate Card statements for participation in the Corporate CashBack ® Program.

(p) **CPC Account(s)** – means your Corporate Purchasing Card Account established in the United States pursuant to the Agreement, and any amendment(s) thereto, excluding transactions and fees generated from your Buyer Initiated Payment service and Global Dollar Card Account.

(q) **Credit Losses** – is the amount of Charges for which payment becomes one hundred eighty (180) calendar days or more past due.

(r) **Daily Ending Balances for Select Amex Accounts** – means for Select Amex Accounts issued for any given day the sum of (i) the previous day's daily ending balance, (ii) any Billed Charges for Select Amex Accounts, and (iii) all posted payments. For the sake of clarification, posted payments shall be counted as a negative number for purposes of the Daily Ending Balance for Select Amex Accounts calculation.

(s) **Daily Ending Balances for B2B Accounts** – means for B2B Accounts issued in the United States for any given day the sum of (i) the previous day's daily ending balance, (ii) any Billed Charges for B2B Accounts, and (iii) all posted payments. For the sake of clarification, posted payments shall be counted as a negative number for purposes of the Daily Ending Balance for B2B Accounts calculation.

(t) **E&I Contract Year** – means the period beginning on December 1 and ending one day before the one-year anniversary of December 1, and each one-year period that occurs thereafter.

(u) **Financial Effective Date** – is the 1st calendar day of the month corresponding to the Effective Date of the Agreement. In no event shall the Financial Effective Date be more than 31 calendar days from the Effective Date of the Agreement.

(v) **Financial Incentive Payment** – is the aggregate of all financial incentives owed to you at the completion of any Contract Year minus your Credit Losses, as calculated pursuant to this Financial Appendix.

(w) **"Large Ticket Net Annual Charge Volume ("LT-NACV")** – shall be defined as the portion of B2B-NACV calculated by aggregating all individual transactions equal to or greater than $7,500, excluding all BD Transactions and Stryker Transactions.

(x) **Last Incentive Payment** – shall mean the last remaining Financial Incentive Payment owed under this Financial Appendix where no New Agreement is executed 90 days following either the expiration or termination of the Financial Appendix.

(y) ***Membership Rewards*® Cost per Point ("MR Cost per Point")** – means a per point representation of the overall cost that Amex assigns to making the Membership Rewards® Program available to corporate programs in the United States. Amex's methodology to calculate MR Cost per Point is proprietary and is partly based on confidential information contained in individual agreements with our business partners in the Membership Rewards® Program.

(z) ***Membership Rewards® Program Expenses* ("MR Expenses")** – is the amount obtained by: (i) multiplying (A) the total Membership Rewards® points earned by your employees and/or the Company, including Affiliates and/or employees of Affiliates, if any, who are enrolled in the Membership Rewards® or Corporate Membership Rewards® Program and (B) the Membership Rewards Cost per Point.

(aa) **Net Annual Charge Volume for B2B Accounts ("B2BNACV")** – means, with respect to any Contract Year, (i) the aggregate amount of all Member Entities Charges incurred (and invoiced on the applicable billing cycle dates occurring) during such Contract Year on the B2B Accounts issued pursuant to the Agreement, minus (ii) delinquency assessments, fees, cash advances, Charges resulting from Unauthorized Use, and credits on such B2B Accounts for such Contract Year. The date of the closing of the last billing cycle during a Contract Year may not necessarily correspond to the last calendar date of such Contract Year.

(bb) **Net Annual Charge Volume for BD Transactions ("BD-NACV")** – means the portion of your B2BNACV calculated

by aggregating all individual BD Transactions.

(cc) **Net Annual Charge Volume for Select Amex Accounts ("CC-NACV")** – means, with respect to any Contract Year, (i) the aggregate amount of all Member Entities Charges incurred (and invoiced on the applicable billing cycle dates occurring) during such Contract Year on the Select Amex Accounts issued pursuant to the Agreement, minus (ii) delinquency assessments, fees, cash advances, Charges resulting from Unauthorized Use, and credits on such Select Amex Accounts for such Contract Year. The date of the closing of the last billing cycle during a Contract Year may not necessarily correspond to the last calendar date of such Contract Year.

(dd) **Net Annual Charge Volume for Commercial Card Accounts ("Commercial Card-NACV")** – means, with respect to any Contract Year, the sum of all Member Entities B2BNACV and CC-NACV.

(ee) **Net Quarterly Commercial Card Charge Volume ("NQCCCV")** – means, for each applicable quarterly period, (i) the aggregate total amount of Charges incurred (and invoiced on the applicable billing cycle dates occurring) during the applicable quarter of a Contract Year on the Select Amex Accounts, CPC Accounts, BIP Accounts and vPayment Accounts issued pursuant to this Agreement, minus (ii) delinquency assessments, fees, cash advances, unauthorized charges and credits on the Select Amex Accounts, CPC Accounts, BIP Accounts and vPayment Accounts in each case for the applicable quarter.

(ff) **Net Annual Charge Volume for Stryker Transaction ("Stryker-NACV")** – means the portion of your B2BNACV calculated by aggregating all individual Stryker Transactions.

(gg) New Agreement - shall mean an amendment to the Agreement or a new agreement, executed by the parties, that contains a financial appendix(ces) that replaces and consecutively supersedes this Financial Appendix ("New Financial Appendix").

(hh)

(ii) **Select Amex Accounts** – means all Amex Accounts issued to you in the United States other than the Global Dollar Card Account, Corporate Purchasing Card Account, vPayment Account or Buyer Initiated Payment transactions.

(jj) **Standard Ticket Net Annual Charge Volume ("ST-NACV")** – shall be defined as the portion of B2B-NACV calculated by aggregating all individual transactions less than $7,500 excluding all BD Transactions and Stryker Transactions, plus (ii) all transactions on your Select Amex Accounts.

(kk) **Stryker Program Affiliates** – means, as of the Financial Effective Date, the following entities listed below and any other affiliates that may become Stryker Program Affiliates. This list may be updated from time to time without notice. A complete schedule of the then current Stryker Program Affiliates may be provided by American Express to Company upon written request from Company.

- Stryker Sales Corporation, Stryker Corporation, Stryker Communications, Howmedica Osteonics Corp.

(ll) **Stryker Transactions** – shall be defined as individual Charges on your BIP Accounts with Stryker Program Affiliates.

(mm) **Term** – has the meaning set forth in the section titled "Term of Financial Appendix" of this Financial Appendix.

(nn) **vPayment Account(s)** – means your vPayment Accounts established in the United States pursuant to the Agreement, and any amendment(s) thereto.

(oo) **vPayment Losses** – shall mean Charges resulting from the Unauthorized Use of vPayment, as such term is defined in the Agreement.

II. CONTRACT YEAR INCENTIVES

This Section II sets forth the terms and conditions for payment of, and the manner in which we will calculate, the Net Incentive Amount, which is your Financial Incentive. Unless otherwise stated in this Financial Appendix, in order for you to

be eligible to receive any Financial Incentive for any Contract Year, (a) all companies that are members of Educational and Institutional Cooperative Service, Inc. ("**E&I**") group purchasing program and that have executed an agreement with American Express that is substantially similar to the Agreement (each such agreement, a "**Member Entity Agreement**") pursuant to the terms of the Group Purchasing Agreement-Services (the "**E&I Agreement**"), effective as of June 1, 2019, as amended from time to time, between American Express and E&I ("**Member Entities**") must achieve a minimum Aggregate Commercial Card-NACV as set forth herein for such Contract Year.

Company agrees that the Aggregate Commercial Card-NACV for each Contract Year shall be calculated solely by American Express. Company understands and agrees that American Express is bound by confidentiality terms under its agreements with the other Member Entities, and therefore will not disclose any Member Entity's Commercial Card-NACV to the Company. As applicable, you represent and warrant that you have an obligation to accurately report the Financial Incentives you receive from American Express in your Medicaid and Medicare cost reports, and you shall comply with such obligation during the Term.

A. Net Incentive Amount.

Each Contract Year, we will pay you the Net Incentive Amount which is calculated by:

	Base Incentive Amount
+/-	CHD Adjustment Amount
+/-	CHD B2B Adjustment Amount
-	MR Expenses
-	CCB Expenses, if any
-	vPayment Losses
=	Net Incentive Amount

B. Base Incentive Amount

1. Your ST Base Incentive Amount, your LT Base Incentive Amount, your Stryker BIP Account Base Incentive Amount, your BD BIP Account Base Incentive Amount, and your $1M+ Base Incentive Amount together will be your Base Incentive Amount.

a) Your **ST Base Incentive Amount** will be calculated: (a) identifying the Standard Ticket Base Incentive Rate associated with the Aggregate B2BNACV in accordance with the table below and (b) multiplying your ST-NACV by such basis points:

b) Your **LT Base Incentive Amount** will be calculated: (a) identifying the Large Ticket Base Incentive Rate associated with the Aggregate B2BNACV in accordance with the table below and (b) multiplying your LT-NACV by such basis points:

c) Your **BD Base Incentive Amount** will be calculated: (i) determining the BD-NACV, and (ii) multiplying the BD-NACV by 25 basis points.

d) Your **Stryker Base Incentive Amount** will be calculated: (i) determining the Stryker-NACV, and (ii) multiplying the Stryker-NACV by 25 basis points.

Aggregate Commercial Card-NACV (USD MM=Millions)	Standard Base Incentive Rate ("ST-BIR") (1 bp = .01%)	Large Ticket Base Incentive Rate ("LT-BIR") (1 bp = .01%)
$ 0 - $599.99.99MM	127 bps	50 bps
$600.0MM - $699.99MM	130 bps	50 bps
$700.0MM - $799.99MM	131 bps	50 bps
$800.0MM - $899.99MM	133 bps	50 bps
$900.0MM - $999.99MM	135 bps	50 bps
$1000.0MM +	150 bps	50 bps

(e) If the One-Month LIBOR Rate exceeds 1.00% in any Contract Year, the BIR for such Contract Year shall be reduced by 8 basis points for every full one percent (1%) by which such annual average exceeds 1.00% for such Contract Year, or the corresponding pro-rata portion of such basis points if such percentage increase is not equal to a whole number (the "**Interest Rate Adjustment**"). The One-Month LIBOR Rate shall be the average of the twelve (12) individual monthly rates published in the Wall Street Journal on the last day of each month for such Contract Year weighted against each month's corresponding Commercial Card-NACV for such Contract Year.

If American Express determines that the One-Month LIBOR Rate is unavailable or has been permanently discontinued, American Express will use, as a substitute for the One-Month LIBOR Rate (the "**Alternative Rate**"), an alternative reference rate selected by the central bank, reserve bank, monetary authority or any similar institution (including any committee or working group thereof) that is consistent with accepted market practice. As part of such substitution, American Express will make such adjustments ("**LIBOR Adjustments**") to the Alternative Rate or the spread thereon, in each case that are consistent with accepted market practice for the use of such Alternative Rate. If American Express determines that there is no clear market practice regarding a substitute for the One-Month LIBOR Rate, American Express may, in its sole discretion, (i) appoint an independent financial advisor to determine an appropriate Alternative Rate and any LIBOR Adjustments or (ii) use the average One-Month LIBOR Rate for the immediately preceding annual period of the Term.

(f) Company agrees that Amex is Company's preferred provider for the Term of this Financial Appendix and shall not endeavor to procure or engage, nor through a third party procure or engage, a provider other than Amex or the provision of a Commercial Card Program without our prior written consent, which shall not be unreasonably withheld. A "Commercial Card Program" means any Amex Account established or available to the Company under the Agreement, which shall be used for business travel and entertainment related expenses.

C. CHD CC Adjustment Amount

(a) For any particular Contract Year, your CHD CC adjustment amount, ("**CHD CC Adjustment Amount**") will be equal to:

(i) the difference between the CHD CC Benchmark and your CHD Performance for that applicable Contract Year multiplied by

(ii) 1.50 basis points (0.015%) if your CHD CC Performance is under 7 calendar days OR -2.00 basis points (0.02%) if your CHD Performance is equal to or greater than 7 calendar days; and multiplied by

(iii) your CC-NACV for that applicable Contract Year.

For the sake of clarification, if the CHD CC Adjustment Amount is negative, it will be deducted from your Base Incentive Amount.

(b) Notwithstanding the previous subsection (i), the lowest CHD Performance that will be used to calculate your CHD Amount is 3.

Application of the CHD CC Adjustment Amount:

For any particular Contract Year, your CHD Adjustment Amount will affect your Base Incentive Amount as follows:

(a) If your CHD CC Performance for the applicable Contract Year is 7.0 calendar days or below, the Base Incentive Amount will be increased by the CHD Adjustment Amount.

(b) If the CHD CC Performance for the applicable Contract Year is 7 calendar days, the CHD Adjustment Amount will be equal to zero and your Base Incentive Amount will not be affected by your CHD CC Adjustment Amount.

(c) If the CHD CC Performance for the applicable Contract Year is 7.01 calendar days or more, the Base Incentive Amount will be decreased by the CHD CC Adjustment Amount.

D. CHD B2B Adjustment Amount

(a) For any particular Contract Year, your CHD adjustment amount, (**"CHD B2BAdjustment Amount"**) will be equal to:

(i) the difference between the CHD B2B Benchmark and your CHD Performance for that applicable Contract Year multiplied by

(ii) 1.50 basis points (0.015%) if your CHD B2B Performance is under 7 calendar days OR -2.00 basis points (0.02%) if your CHD B2B Performance is greater than 7 calendar days, and multiplied by

(iii) your B2BNACV for that applicable Contract Year.

For the sake of clarification, if the CHD B2B Adjustment Amount is negative, it will be deducted from your Base Incentive Amount.

(b) Notwithstanding the previous subsection (i), the lowest CHD B2B Performance that will be used to calculate your CHD Amount is 3.

Application of the B2B CHD Adjustment Amount:

For any particular Contract Year, your CHD B2B Adjustment Amount will affect your Base Incentive Amount as follows:

(a) If your B2B CHD Performance for the applicable Contract Year is 7 calendar days or below, the Base Incentive Amount will be increased by the CHD B2B Adjustment Amount.

(b) If your B2B CHD Performance for the applicable Contract Year is 7 calendar days the CHD Adjustment Amount will be equal to zero and your Base Incentive Amount will not be affected by your CHD B2B Adjustment Amount.

(c) If the CHD B2B Performance for the applicable Contract Year is 7.01 calendar days or more, the Base Incentive Amount will be decreased by the CHD B2B Adjustment Amount.

E. Deductions

For each Contract Year, Amex shall reduce any Financial Incentives earned by you by the total amount of your Credit Losses for such Contract Year. For illustrative purposes, your Financial Incentive Amount may be calculated as follows:

Net Incentive Amount

- Credit Losses

= Financial Incentive Amount

F. Payment Terms

1. American Express will make three quarterly payments ("**Quarterly Payment(s)**") and one end of E&I Contract Year payment to you for any Financial Incentives owed by us to you for each Contract Year pursuant to this Financial Appendix. We will pay each Quarterly Payment to you within ninety (90) days following the end of the applicable quarterly period of each E&I Contract Year. Each of the E&I Contract Year payments will be paid to you within ninety (90) days following the end of such E&I Contract Year, if applicable. The "**E&I Contract Year**" is the period beginning on June 1 and ending one day before the one-year anniversary of June 1, and each one-year period that occurs thereafter. For purposes of clarity, the "**Quarterly Periods**" shall mean each of the periods beginning on January 1, April 1, July 1, and October 1. However, if the Agreement or this Financial Appendix terminates for any reason prior to the completion of any Contract Year, no Financial Incentive shall be owed or paid to you for such Contract Year.

   American Express will calculate each Quarterly Payment in the following manner: American Express will take ANQCV for each quarter and multiply such ANQCV by four (4) to estimate a Contract Year Aggregate Commercial Card-NACV ("**Estimated Contract Year Aggregate Commercial Card-NACV**") in order to arrive at the applicable Base Incentive Rate used to determine your Base Incentive Amount for such quarter ("**Quarterly Base Incentive Amount**"). Next, we will determine your Quarterly Base Incentive Amount by multiplying your NQCCCV by your Base Incentive Rate. We will then adjust such Quarterly Base Incentive Amount by: (i) adding or subtracting, as applicable, the Quarterly CHD or CHD B2B Adjustment Amount (as defined herein); and (ii) subtracting estimated Credit Losses and Uncovered vPayment Losses for such quarterly period. For the purposes of this Financial Appendix, your Quarterly CHD or CHD B2B Adjustment Amount will be calculated using the methods described in Section II.C and D above, "CHD Adjustment Amount", provided however, we will substitute each reference to Contract Year with the applicable "quarterly period" ("**Quarterly CHD Adjustment Amount**").

   At the end of each Contract Year, we will calculate your Net Incentive Amount in accordance with Section II.A (subtracting any applicable interest rate adjustment determined pursuant to Section II.B (f) and deduct from such amount all Quarterly Payments made to you throughout such Contract Year ("**Year-End Net Incentive Amount**"). If any Net Incentive Amount remains outstanding after such deduction, it shall be due and payable by us to you. In the event that your Year-End Net Incentive Amount is negative or if you cancel the Agreement or this Financial Appendix prior to the completion of any Contract Year, you shall promptly refund (but in no event later than five (5) business days) to American Express the entire amount of American Express over-payment or payment upon receipt of an invoice from us.

2. Notwithstanding the forgoing, in order to earn a Financial Incentive Payment for any Contract Year, the Agreement and Financial Appendix must remain in effect for the entire Contract Year, unless Company and American Express have entered into a New Agreement with a New Financial Appendix which has a term exceeding twelve months, in which case Company will be paid pro-rata financial incentives due under this Financial Appendix, if any, up to one calendar day before the financial effective date of the New Financial Appendix. Moreover, if this Financial Appendix replaces and consecutively supersedes a prior financial appendix, then Company will be paid any pro-rata financial incentives due under the prior financial appendix, if any, up to one calendar day before financial effective date of the New Financial Appendix.

3. Company agrees to accept financial incentive payments from American Express as consideration for achieving certain pre-determined sales or promotional targets for American Express products or services as set forth in this Financial Appendix. Under no circumstances will Company redistribute a financial incentive payment to a director, officer, employee, agent, consultant, or representative of Company or other third party.

4. Company agrees that American Express will remit financial incentive payments to Company as an entity, and not under any circumstances to any individual, including but not limited to, a director, officer, employee, agent, consultant, or representative of Company, or other third party. American Express will make financial incentive payments by wire to the bank accounts of Company in, or via check delivered to, the location where Company does business.
5. Company shall ensure that each third party, individual, or entity performing services to or on behalf of Company in connection with this Agreement shall strictly comply with the restrictions set forth above regarding use and redistribution of any financial incentive payment.
6. Company agrees that full disclosure of this Agreement may be made in response to a lawful request of U.S. or other governmental authorities, at American Express's sole discretion.

G. Modification of Financial Incentives

1. If (a) your corporate or business structure changes due to a merger, acquisition, divestiture, business combination or for any other reason, after the Financial Effective Date, excluding any transaction that has been publicly announced prior to such Financial Effective Date, (b) you cease to be a E&I Member, or (c) the E&I Agreement terminates for any reason, this Financial Appendix may be terminated and renegotiated by Amex at its sole discretion; provided, however that if no such new financial appendix is executed by the parties within thirty (30) days after the start of such renegotiation, Company may terminate the Agreement without termination charge or penalty or other similar fee or charge being owed to Amex, but shall be responsible for any refund obligations Company may have in accordance with the Financial Appendix.
2. If at any time during the term of this Financial Appendix, Amex reasonably believes that the economic conditions, or legal or regulatory factors that impact Amex have materially changed, then Amex reserves the right to renegotiate this Financial Appendix.

III. FEE WAIVERS

ANNUAL CORPORATE CARD FEES AND CORPORATE MEETING CARD FEES

During the Term, we will waive the annual fees for the basic green Corporate Cards and Corporate Meeting Cards issued under the Agreement. This fee waiver does not apply to any premium Corporate Cards issued under the Agreement. American Express reserves the right to change the annual fees for basic green Corporate Cards at any time at its discretion.

IV. TERM OF FINANCIAL APPENDIX

Subject to the terms herein, the term of this Financial Appendix shall commence on the Financial Effective Date and shall end on May 31, 2024 (**"Initial Term"**) unless otherwise extended by Amex and E&I. If Amex and E&I agrees to extend the Initial Term: (i) the first extension Term (the **"First Extension Term"**) shall commence on June 1, 2024 and shall end on May 31, 2025, (ii) the second extension Term (the **"Second Extension Term"**) shall commence on June 1, 2025 and shall end on May 31, 2026.

APPENDIX B

U.S. BUYER INITIATED PAYMENTS SERVICES ADDENDUM

This Buyer Initiated Payments Services Addendum (this "Addendum") is an addendum to the CPC Agreement between American Express Travel Related Services Company, Inc. ("we", "us", and "American Express") and CLEARVIEW LOCAL SCHOOLS ("you", "your" and "Company"). The CPC Agreement, as supplemented by this Addendum, governs your use of the Services. In the event of any conflict between the terms and conditions of this Addendum and the terms and conditions of the CPC Agreement, the terms and conditions of this Addendum shall prevail.

1. DEFINITIONS

"Additional Implementation Fee" shall have the meaning set forth in Section 3 hereof.

"American Express Parties" shall mean American Express, its affiliates, third party suppliers and subcontractors, and each of their respective directors, officers, shareholders, employees and agents.

"Buyer Initiated Payments" shall mean the electronic payment service solution for our customers that enable them to make payments to their suppliers.

"CPC" shall mean the non-plastic Corporate Purchasing Card account issued under the CPC Agreement.

"CPC Agreement" shall mean the most recent agreement and any amendments thereto between Company and American Express that sets forth the terms and conditions of Company's use of CPC.

"Customer Data" shall mean any data provided by you for incorporation in or use with the Service and any data output from the Service from the processing of such data entered or provided.

"Documentation" shall mean all manuals, end-user documentation, quick-reference guides and other related materials pertaining to the Service.

"Feedback" shall have the meaning set forth in Section 2(f) hereof.

"License" shall mean the license to access the Service as described more particularly in Section 5 hereof.

"Password" shall have the meaning set forth in Section 2(d) hereof.

"Payment Methods" shall mean, where and whenever available, CPC, Automated Clearing House (ACH), electronic funds transfer, check, and any other payment method mutually agreed upon between the parties.

"Service" shall mean Buyer Initiated Payments, as provided, delivered, hosted and/or managed by American Express or its third party suppliers acting as an application service provider.

"Supplier" shall mean any person or entity through which you are procuring goods and/or services.

"Term" shall have the meaning set forth in Section 4(a) hereof.

"Transaction" shall mean each transaction conducted through the Service.

"User ID" shall have the meaning set forth in Section 2(d) hereof.

"Users" shall mean the persons designated by Company to American Express as authorized users of the Service, during the Company's implementation of the Service or upon request by Company thereafter from time to time.

2. PAYMENT SERVICES

(a) Use of Service. Use of the Service is subject to your compliance with the terms and conditions of this Addendum and is restricted to Users. Company understands that the designation of, and restricting access to, Users is part of the security of Company's overall Buyer Initiated Payments data and Company agrees that Company shall not substitute or replace any User, or add any additional Users, except upon written notice to and with the assistance of the applicable American Express team whose responsibility it is to provide the Service. Company shall ensure that all Users comply with the terms and conditions of this Addendum.

(b) Method of Payment. Unless otherwise approved by American Express in writing, the Payment Methods will be the only methods of payment that may be utilized for the Service. You understand and agree that (a) your use of CPC shall be governed by the terms and conditions of such CPC Agreement, including, without limitation, any restrictions contained therein, and (b) your ability to use CPC as a Payment Method shall terminate upon the termination of such CPC Agreement. If you elect to use an ACH Payment as your Payment Method, you acknowledge that you are the "Originator" as such term is defined in the operating rules and guidelines of the National Automated Clearing House Association (the "NACHA Rules") with respect to each ACH Payment you authorize and you agree to assume the obligations and responsibilities of Originators under the NACHA Rules. You further acknowledge that ACH Payments may not be initiated in violation of the laws of the United States, including without limitation, the sanctions, laws, regulations and orders administered by OFAC, FinCEN and any state laws, regulations or orders applicable to ACH payments. You agree to comply with the NACHA Rules and the rules of any regional automated clearing house association used to send the ACH entry. You acknowledge that we are a service provider to you. As such at your request, we will deliver your ACH instructions to the financial institution specified by you to cause funds in your deposit account to be sent to the deposit account of a payee designated by you. We are not responsible for the content or format of the ACH instructions, and you are solely responsible for the accuracy of all information and instructions provided to us. With respect to each ACH Payment you request, you are making each representation and warranty that an Originator or ODFI, as defined in the NACHA Rules, would make with respect to that entry.

(c) Your Obligations. Within 30 calendar days of the Effective Date, you will provide us with (i) your target list of Suppliers, and (ii) the name and other contact information of your authorized representative, who has been designated by you to assist us during the Term with your implementation and your use of the Service. In addition, you will cooperate with us and our third-party suppliers during our implementation of the Service for you, which includes, but is not limited to, assisting in the enablement of the Suppliers included on your target list and providing technical direction and input. If your CPC Agreement with us terminates during the Term and is not renewed or replaced with a new agreement governing your participation in the American Express Corporate Purchasing Card Program within 10 days of such termination, we shall have the right to terminate this Addendum by providing you with 10 days' prior written notice.

(d) Passwords. Each User will be assigned a unique user ID (each, a "User ID") and password (each, a "Password") to allow such User to access the Service. You are entirely responsible for maintaining the confidentiality of the Passwords and User IDs. Furthermore, you are entirely responsible for any and all activities that occur under each User ID and Password. You must notify us in writing immediately of any unauthorized access or use of the User IDs or Passwords or any other breach of security. We will not be liable for any loss or damage that you may incur as a result of anyone using the Password or User IDs, either with or without your knowledge, except and only to the extent that we solely caused such loss or damage.

(e) License. You hereby grant us and our third party suppliers an irrevocable, perpetual, world-wide, non-exclusive license to use, reproduce, store, encode, resize, reformat, host, process and otherwise modify, translate, maintain or prepare derivatives, and perform, display, disseminate and distribute the Customer Data you upload to the Service and to otherwise deal with such Customer Data only as may be reasonably necessary for us to provide the Service to you. You represent and warrant that you have the right to grant the license above.

(f) Feedback. During the Term, you may be asked to submit an evaluation of the Service ("Feedback") to your American Express Account/Business Development Manager through regular meetings to be scheduled upon mutual agreement. American Express will own all rights and interest to Feedback.

You may be asked to participate in case studies and provide testimonials where appropriate. American Express reserves the right to include this information in future Buyer Initiated Payment marketing and promotions.

3. PRICING AND CHARGES

Fees. If you request (a) additional work to be performed by us in connection with the initial implementation that is not contemplated by the initial implementation statement of work, and/or (b) require additional implementation work to be conducted by us after the initial implementation, then such additional work shall be subject to mutual agreement by the parties, including with respect to additional fees in connection therewith (collectively, the "Additional Implementation Fees"). Such Additional Implementation Fees shall be invoiced and paid in accordance with the terms mutually agreed upon by the parties.

4. TERM / TERMINATION / SUSPENSION

(a) Term. This Addendum shall be effective on the Effective Date and shall be coterminous with the CPC Agreement, unless earlier terminated pursuant to Sections 2(c) above or 4(b)-(d) below.

(b) Termination for Convenience. Either party may terminate this Addendum for convenience at any time upon thirty (30) days' prior written notice to the other.

(c) Termination for Material Breach. Either party may terminate this Addendum in the event that the other party fails to remedy a material breach within thirty (30) days of its receipt of written notice. If such breach is not capable of being cured, termination may be immediate.

(d) Termination for Financial Distress. Either party may terminate this Addendum immediately upon notice to the other party upon the occurrence of: (1) the liquidation or dissolution of the other party, or (2) the insolvency of the other party or the filing of bankruptcy proceedings or similar proceedings with respect to the business of the other party, or (3) the other party admitting its inability to pay debts as they become due.

(e) Effect of Termination. Termination of this Addendum shall not cancel your obligation for the payment of any amounts owed by you to us for any reason under this Addendum or under any other agreement that you have with us, including, without limitation, your CPC Agreement with us.

5. LICENSE RIGHTS AND TERMS

(a) License Grant. Subject to the terms and conditions of this Addendum, we hereby grant each User a limited, non-transferable, non-exclusive license to permit such User to access and use the Service for the sole purpose of managing Company's invoices and payments and/or creating reports relating thereto and solely during the term of this Addendum.

American Express shall retain all rights and interest to and in the Service, including, but not limited to, patents, copyrights, trade secrets, and other proprietary rights. This license does not constitute a sale, nor does it pass to you any title to or any proprietary rights in the Service nor shall you acquire any right or interest in the Service as a result of any changes to, modifications of or additions to the Service made by you or American Express.

(b) Restrictions. Neither Company nor the Users may download the Service. Neither Company nor its Users shall: (i) remove any copyright or other proprietary legends from the Service, including, but not limited to, copyright or trademark notices; (ii) sub-license, lease, rent, assign, transfer or distribute the Service or any information, software, products or services obtained from the Service to any third party; (iii) alter, modify, copy, enhance or adapt the Service or the Documentation; (iv) attempt to reverse

engineer, convert, translate, decompile, disassemble or merge the Service with any other software or materials or otherwise attempt to obtain the source code to the Service; (v) otherwise create or attempt to create any derivative works from the Service; (vi) use the Service for any purpose that is unlawful or prohibited by this Addendum; (vii) attempt to obtain any materials or information through any means not intentionally made available through the Service; or (ix) attempt to gain unauthorized access to the Service, other Passwords or User IDs, or computer systems or networks connected to any American Express server or to the Service, through hacking, password mining or any other means. Notwithstanding the foregoing, you may download, keep or merge reports generated by you through the Service. American Express retains all proprietary rights to the format and arrangement of any and all reports generated through the Service.

You and each User shall (i) comply with all applicable laws with respect to the Service, including, but not limited to, laws related to the export of technical or personal data; (ii) only use the Service with content and data for which you have all necessary rights; and (iii) use the Service in accordance with the Documentation, as it may be amended from time to time and as provided by American Express.

(c) Support. In the event that we enhance or modify the Service, we will provide you with details of the changes and access to the newest version of the Service. During the Term, we will provide, at no cost to you, such technical support for the operational use of the Service as may be determined by us to be required for the continued use of the Service.

(d) Disclaimers. American Express makes no representation that the Service, or any materials provided through the Service, is appropriate or available for use in locations outside the United States and accessing them from territories where their contents are illegal is prohibited. Users who choose to access the Service from other locations do so on their own initiative and are responsible for compliance with local laws. The American Express Parties will not be responsible for any third party's software, service or hardware the American Express Parties provide or use in the performance of the Services under this Addendum. The American Express Parties will not be responsible for the interception or delay of data transmitted to or from you. YOU EXPRESSLY AGREE THAT USE OF THE SERVICE IS AT YOUR SOLE RISK. THE SERVICE IS MADE AVAILABLE ON AN "AS IS," "AS AVAILABLE" BASIS. YOU AGREE THAT YOUR ACCESS TO THE SOFTWARE AND USE OF THE SERVICE IS AT YOUR OWN RISK. AMERICAN EXPRESS HEREBY EXPRESSLY DISCLAIMS ON BEHALF OF ITSELF AND THE AMERICAN EXPRESS PARTIES, ANY AND ALL WARRANTIES, INCLUDING WITHOUT LIMITATION, ANY WARRANTY THAT THE SERVICE WILL BE UNINTERRUPTED OR ERROR-FREE AND EXPRESS OR IMPLIED WARRANTIES OF: (i) MERCHANTABILITY; (ii) FITNESS FOR A PARTICULAR PURPOSE; AND (iii) NONINFRINGEMENT. AMERICAN EXPRESS DOES NOT AND CANNOT CONTROL THE FLOW OF DATA TO OR FROM THE INTERNET, AND/OR COMPANY'S COMPUTER EQUIPMENT. AT TIMES, ACTIONS OR INACTIONS OF THIRD PARTIES CAN IMPAIR OR DISRUPT COMPANY'S CONNECTIONS TO THE INTERNET AND/OR THE SERVICE. ACCORDINGLY, AMERICAN EXPRESS DISCLAIMS ANY AND ALL LIABILITY RESULTING THEREFROM.

(e) Subsidiaries and Affiliates. Upon your written request, we may grant the License described under Section 5(a) hereof, subject to the terms and conditions of this Addendum, to certain of your subsidiaries and/or affiliates which are approved by us and which agree to be bound by this Addendum. You agree to cause each such subsidiary and/or affiliate to comply with this Addendum and you are liable to us for any breach of this Addendum by any such subsidiary and/or affiliate.

6. MISCELLANEOUS

(a) Integration. The parties hereto acknowledge that they have read and understand this Addendum and agree to be bound by its terms. The parties further agree that this Addendum, together with the Agreement, is the complete and exclusive statement of the agreement between the parties and supersedes all prior contemporaneous oral or written understandings or agreements among the parties relating to the subject matter of this Addendum.

(b) Messaging Content. American Express reserves the right to refuse to broadcast any message, e mail text, ad or marketing campaign, regardless of its source, that American Express in its sole discretion determines is inappropriate or would negatively affect the reputation of American Express. In no event shall any American Express Party be liable to Company for any loss, cost, claim, injury, liability, or expense, including reasonable attorneys' fees, relating to or arising out of the provision of messages, email text, ads

or marketing campaigns by American Express for which the content has been supplied by or approved in advance by Company.

(c) Survival. Sections 1, 4(e), 5(d), and 6 of this Addendum and the license granted under Section 2(e) hereof shall survive the termination of this Addendum.

(d) Intellectual Property Rights. Notwithstanding anything herein to the contrary contained herein or in the Agreement, American Express maintains all rights, title and interests in and to Buyer Initiated Payment, the Service and the information and data collected through any of the foregoing.

(e) Notices. All notices required or permitted under this Addendum shall be in writing to the other party, to the respective address specified below (or other address as the parties give notice of hereunder) and will be deemed given (a) if delivered personally (including by overnight express or messenger), upon delivery, (b) if delivered by first class, registered or certified mail (return receipt requested), upon the earlier of actual delivery or three days after being mailed, or (c) if given by facsimile, upon confirmation of receipt by facsimile transmission report.

If to American Express:

American Express Travel Related Services Company, Inc.
American Express Tower
200 Vesey Street
New York, New York 10285
Attn.: Andrew T Jamison
Facsimile No.: 212-640-8916

If to Company:

CLEARVIEW LOCAL SCHOOLS
Address: {{Address1_es_:signer }}
{{Address2_es_:signer }}
Attn: {{Attn_es_:signer }}
Facsimile No.: {{Fax_es_:signer }}

With a copy to:

American Express Travel Related
Services Company, Inc.
General Counsel's Office
American Express Tower
200 Vesey Street
New York, New York 10285
Attn: General Counsel's Office
Facsimile: 212-640-0358

The terms and conditions of this Addendum are effective as of the last date written below ("Effective Date").

AMERICAN EXPRESS TRAVEL RELATED SERVICES COMPANY INC.

By: {{_es_signer2_signature }}

Printed Name: {{_es_signer2_fullname }}

Title: {{_es_signer2_title }}

Date: {{_es_signer2_date}}

CLEARVIEW LOCAL SCHOOLS

By: {{_es_signer_signature }}

Printed Name: {{_es_signer_fullname }}

Title: {{_es_signer_title }}

Date: {{_es_signer_date}}

EXHIBIT XI.A

2020
Course Reimbursement
and Movement on Pay Scale

Last Name	First Name	Sem. Hours	$ Amount	Movement on Pay Scale
Alberti	Eve	3	$449	N/A
Alston	Kellie	6	$1,198	N/A
Anderson	Jennifer	1	$180	N/A
Bednarski	Haley	6	$2,100	N/A
Benzel	Doug	6	$2,100	BA+15
Byahm	Cassidy	N/A	N/A	Master's
Christensen	Jason	6	$2,100	Master's
Cooper	Dustie	1	$180	N/A
Crawford	Erica	2	$360	N/A
Dane	Dianna	3	$224.50	N/A
Dimacchia	Johnna	6	$847	N/A
Dryden	Thomasina	N/A	N/A	Master's
Duke	Tiffany	6	$2,100	N/A
Farley	Jennifer	6	$763.30	N/A
Foster	Chrissy	2	$360	N/A
Howard	Alicia	6	$942	N/A
Jackson	Amy	6	$1,410	N/A
Lewis	Ryan	?	N/A	N/A
Mazelis	Jessica	3	$1,050	BA+15
McMillion	Kelly	2	$360	N/A
Miller-Morog	Holly	N/A	N/A	N/A
Naro	Carey	3	$449	N/A
Painter	Robert	6	$764	N/A
Parker	Jennifer	6	$1,030	MA+15
Phillips	Paula	3	$1,050	N/A
Roule	Sally	6	$2,100	MA+15
Schwartz	Anne	1	$180	N/A
Sloboda	Holly	6	$808	MA+15
Sloboda	Scott	6	$808	MA+60
Southard	Marci	4	$690	N/A
Stafford	Karrie	1	$180	N/A
Stambol	Ann	1	$210	N/A

Stillwagon	Stephanie	15	$1,909	N/A
Strader	Joseph	6	$2,100	BA+15
Streator	Molly	6	$1,096.66	N/A
Suppa	Cheryl	1	$180	N/A
Sutton	Taylor	N/A	N/A	Master's
West	Lurlene	6	$764	MA +30
Wille	Deborah	N/A	N/A	N/A
Administrators				
Collier	Mike	6	$808	N/A
Fazio	Jen	3	$540	N/A
Manning	Laura	6	$1,105	N/A
Rothacker	Noeleen	6	$808	N/A
Stark	Lynne	6	$946	MA+20